Leonardo Electronic Journal of Practices and Technologies Issue 28, January-June 2016
ISSN 1583-1078 p. 57-76

Ancillary services provided by PV power plants

Antonio PIERNO[1], Luigi Pio DI NOIA[1,*], Luigi RUBINO[2]

[1]*Dept. of Electrical Eng. and Information Technology - University of Naples Federico II Via Claudio 21, Naples, Italy*
[2]*Dept. of Industrial and Information Engineering, The Second University of Naples Aversa, Italy*
E-mail(*): luigipio.dinoia@unina.it

[*] Corresponding author: Phone: +39 081 7683232

Received: June 30, 2016 / Accepted: July 15, 2016 / Published: July 31, 2016

Abstract

Renewable energy sources are widely utilized in distributed generation systems, and, recently, they are also considered for providing ancillary services. The paper is focused on PV plants, a survey of the most interesting papers published in the literature in the last decade is reported and the main characteristics of the technical proposals, with their advantages and limits, are evidenced. The results are schematically shown in a table that immediately gives the opportunity to be aware of what was already done, representing a reference tool.

Keywords

Ancillary services; Distributed generation; Photovoltaic systems

Introduction

The gradual depletion of stocks of fossil fuels, the environmental pollution problem and the global climate changes has led governments all over the world to increase the use of renewable energy sources in distributed generation (DG). Wind power plants and photovoltaic have particularly experienced a remarkable development even though they are, as is well

known, unpredictable renewable sources. This is due principally to the recent technological advances which have positioned these technologies in a cost-competitive status with conventional ones [1,2].

A Photovoltaic System is defined by IEC 61836 standard as an "assembly of components that produce and supply electricity by the conversion of solar energy".

When the electrical energy conversion is obtained by means of photovoltaic (PV) arrays, an intermediate converter is needed for interfacing with the distribution grid because the PV modules transform the solar radiation into a direct current that must be converted into AC power. Normally, this converter is split into two stages [3]: the first stage is a dc-dc converter, whereas the second one is a voltage-source-inverter (VSI) synchronized with utility grid. The dc-dc converter enhances the output voltage of photovoltaic arrays up to values suitable for the pulse width modulation (PWM) inverters, whose are widely applied in PV systems. Furthermore, in order to maximize the power extracted from the solar source, a Maximum Power Point Tracking control (MPPT) is usually implemented on the boost converter. Finally, the inverter provides to the grid the power generated by the photovoltaic array with the desired power factor [4].

Normally, hence, the switching power converters of PV systems regulate the power injection into the grid in order to maximize the energy obtained from the renewable source. However, only recently has been proposed in the literature the possibility of using renewable energy sources also for providing ancillary services. Different definitions of ancillary services can be found in the scientific literature.

In agreement with IEC 60050-617, ancillary services are "services necessary for the operation of an electric power system provided by the system operator and/or by power system users". A different definition is proposed by the Union of Electric Industry EURELECTRIC: "Ancillary Services are those services provided by generation, transmission and control equipment which are necessary to support the transmission of electric power from producer to purchaser. These services are required to ensure that the System Operator meets its responsibilities in relation to the safe, secure and reliable operation of the interconnected power system. The services include both mandatory services and services subject to competition".

The Federal Energy Regulatory Commission (FERC), instead, defines the ancillary services as [5] "those services necessary to support the transmission of electric power from

seller to purchaser given the obligations of control areas and transmitting utilities within those control areas to maintain reliable operations of the interconnected transmission system". Considering the classification made by the international committees, this paper focuses the attention on these ancillary services:

- reactive power and voltage regulation (IEC60050-617): it is the service which gives the reactive power necessary to regulate the buses voltage and ensure that the voltage values are contained in a defined range;
- loss compensation (IEC60050-617): it permits to cover the power system losses that occurs when energy is fed by the transmission lines;
- scheduling and dispatch (IEC60050-617): the scheduling is the prevision and the assignment of generation production to satisfy the load requests; the scheduling is carried out in different time (weeks, days, hours). The dispatch is the real time control of generation and transmission, that permits to supply the loads; if some contingencies occur, the dispatch can make some modification in generation and transmission so as guarantee the system availability and reliability;
- load following (IEC60050-617): it is the service provided by on-line generators and storage systems, that permits to track the load fluctuation during the day with a rapid response to system operator requests;
- system protection: service is performed by operating resources (ie rotating reserve, energy storage systems, etc…) exploitable when a not provided load fluctuations happens;
- energy imbalance (IEC60050-617): it allows to fill up the difference between the energy scheduled and the real time energy absorbed. This service acts only when the difference between the energy produced and consumed is contained in a specific bandwidth;
- harmonic compensation (IEEE 1547, IEC 61727, IEC 61000-3-2): this service can improve the power quality in power systems with the totally or partially compensation of harmonic components;
- frequency regulation (IEC60050-617): it helps to control the difference between the scheduled power and the effective power consumption; in this way, it contributes to keep the frequency value in a specific range;
- islanding detection (IEC 62116): this service permits to predict the non intentional disconnection of a power system area. In this way, it is possible to prevent the synchronization loss of power system and the damage of the islanding area devices;

÷ power factor correction (IEC 61000-3-2): this service is closely related to the harmonic compensation and helps to improve the power quality.

Adopting the classification of the ancillary services proposed by FERC, the reactive power and voltage control service can be suitably provided from the power electronics converters. The voltage regulation has been traditionally performed on transmission lines, because distribution networks were passive networks. Nevertheless, the recent diffusion of renewable energy sources directly connected on the distribution networks has extended the voltage regulation problem also to these networks.

Voltage regulation can be realized by compensating the reactive power required by the users. The suitable quantity of reactive power requested for the compensation can be determined at system and at local level. In the first case, only the system operator, who has sufficient information to know what the state of the grid, can provide the voltage regulation. Local voltage regulation is instead a customer service, intended to:

÷ meet customer reactive power needs;

÷ control each customer's impact on system voltage and losses, and ensure that power-factor problems at one customer site do not affect power quality elsewhere on the system.

The primary goal of the voltage regulation is to maintain voltages within certain ranges; however, it is also concerned with minimizing temporal variations in voltage and harmonic distortion. Voltage is usually controlled by means of the ratio-changing devices (e.g., voltage regulators and transformer taps), reactive-power-control devices (e.g., static-var compensators, capacitors and, occasionally, synchronous condensers) and harmonic-control devices (active power filters) [6-8]. The system operator has to monitor and control these voltages and, if needed, must compensate the reactive power of the grid. Concerning the network management, in some cases, it could be more economical to purchase reactive power from a customer than directly compensate this power. When this occurs, some customers can provide this ancillary service to the network. In general, the customer's network includes at the same time renewable sources (photovoltaic arrays, wind turbines, biomasses), storage devices (supercapacitors, electrochemical batteries and flywheels) and passive loads. All this equipment have to be interconnected by means of power converters since some of them work in dc (photovoltaic, supercapacitors, batteries), whereas other in unregulated ac frequency (wind turbines and flywheels) [9-11]. Due to the presence of the converters, this network becomes a "smart grid", in fact it is easily possible to regulate the electrical power flows in

different points of the network [12]. Therefore, the power factor of the currents injected into the grid by each device can be adjusted in order to compensate the reactive power either of their own customer‘s loads or also of other customer‘s loads [13]. However, if the real power does not change, the presence of reactive power increases the apparent power of the devices (e.g., generators, power converters, reactors and capacitors) and hence their capital cost. A customer can compensate an amount of reactive power by reducing the active power generation of the same amount. In this way, the operating cost of reactive power compensation matches the opportunity cost associated with the capability of reduction in the production of real power respect to the available apparent power. One can conclude that reactive power compensation can be provided by a customer only if it is adequately remunerated. In this paper is presented a survey on the most interesting technical solutions set up to provide ancillary services by PV which were recently published.

P-Q Capability of PV power plants

As we stated above, recently has been introduced the possibility of using renewable energy sources also for providing ancillary services. As an example, a PV generation system can provide reactive power each time the power available from the source is lower than the maximum one. This eventuality occurs for many hours during the day and, consequently, it can participate in voltage regulation with no additional costs. The requested amount of reactive power should be provided by the system operator or, alternatively, can be obtained from the PV system. In the second case, to obtain the reactive power requested by loads connected at the same node of the PV unit any signal from the network is needed. Similarly, the PV generation unit can be able to compensate current harmonics measured on the grid. In this way, it is possible to suppress all the harmonics due to loads connected at the same node of the PV system without considerable additional costs in the interface converter. In order for a system to produce not only active power, but also to provide ancillary services, it must have a greater rated power with respect to the traditional use. This grow in its price is completely justified by stability reasons [15,16] and also by its ancillary role.

Two advanced control schemes to control active and reactive power flows injected by the PV unit are proposed in [17,18], which can therefore be employed also as provider of

reactive power compensation. These two models allow to define a sort of "capability chart" for the PV unit, that is, the set of points in the P-Q plane which, at steady state, can be reached by properly operating the control system and without exceeding the physical limits of all the involved devices; in Fig. 1 the qualitative aspects of the P-Q capability chart is reminded.

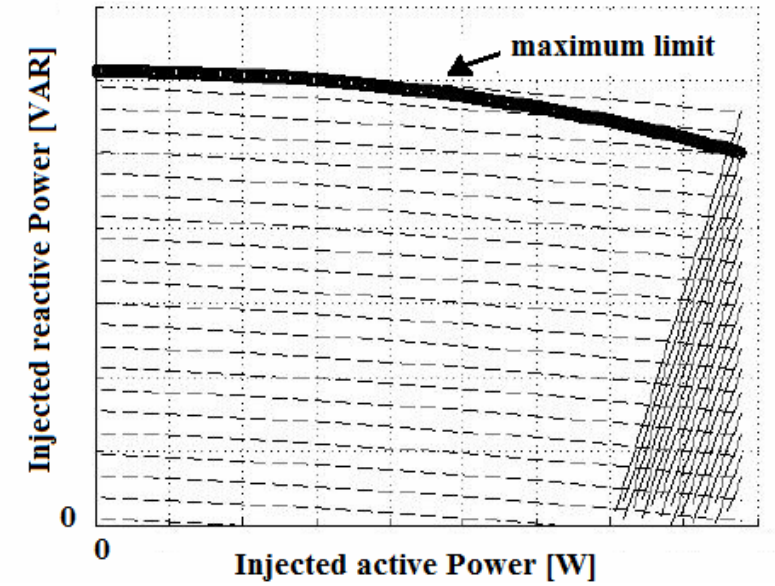

Figure 1. *Qualitative capability chart of [17,18]*

In particular, in [17] a simulation set-up has been used in order to determine the maximum value of reactive power which can be provided by the PV unit in correspondence of different values of the delivered active power. This allows to obtain an approximate procedure to derive the capability curve of the PV production system for its characterization at its AC side; the PV characteristic is described by an analytical approximate expression (the decreasing curve is approximated with a straight line). In [18] a simplified model of the power system is proposed too, which, with low computational costs. is able to evaluate all the set of point in the P-Q plane that can be reached in correspondence to all of the possible inputs. In this way, it is possible to define the capability chart at the AC side of the PV system and so as to provide a helpful instrument to the control system concerning the possible set points that can be adopted. In this case, the PV characteristic is described by a simplified analytical expression (the decreasing curve is approximated with an exponential curve). In both papers [17,18] it is shown how to characterize a PV production system at its AC side.

Reactive Power and Voltage Regulation by PV power plants

An investigation of the possible participation of grid-connected photovoltaic DG units

to the supplying of reactive compensation ancillary service to the distribution grid has been given in [14]. The traditional circuit configuration for a grid-connected photovoltaic power plant appear as in Fig. 2.

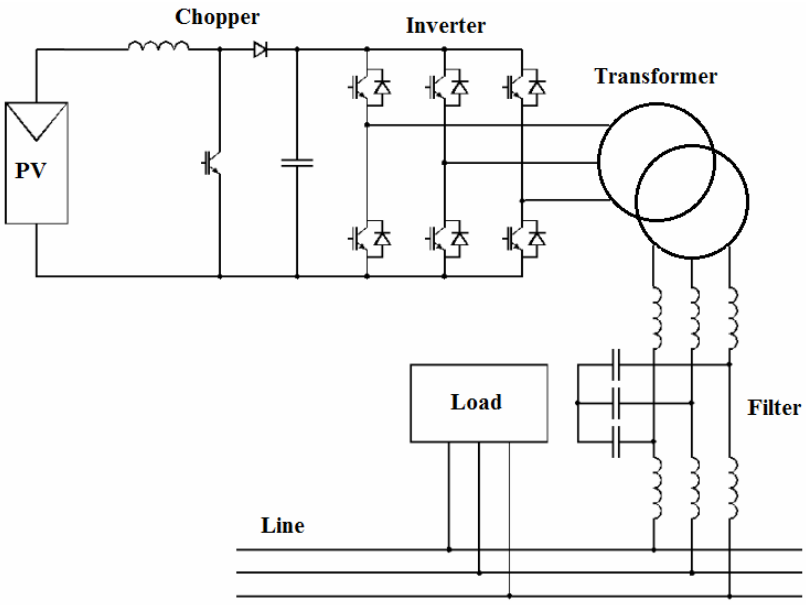

Figure 2. *Traditional circuit configuration for a grid-connected photovoltaic power plant*

Normally, the Inverter DC voltage is controlled by the step-up chopper in order to maximize the active power generated by the PV source; this can be achieved through an MPPT (Maximum Power Point Tracking) algorithm, e.g., Perturb and Observe, Incremental Inductance etc..Whereas, through the inverter, ancillary services can be provided to the grid. A simplified control scheme [19] is proposed in Fig.3.

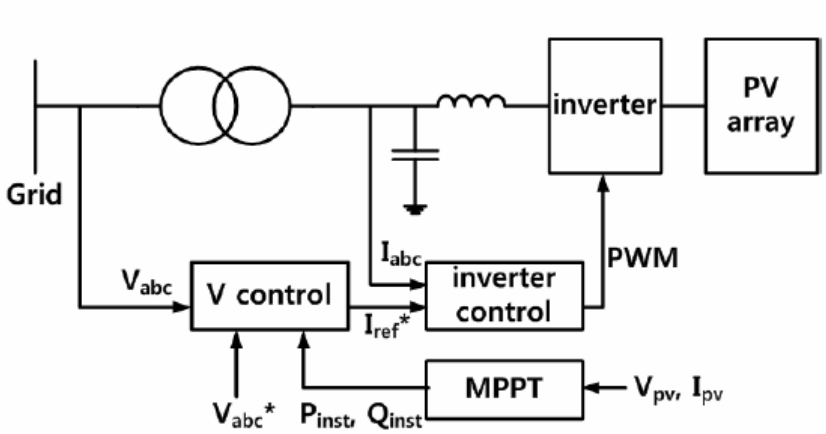

Figure 3. *Traditional control scheme for PV source connected to grid via Inverter*

Most ancillary services require the production (and/or consumption) of reactive power. Since the active power is generally tracked to the maximum point of the PV source, as

mentioned before, the reactive power which can be delivered is limited by the size of the converter and so is the capability of the system to supply ancillary services.

The use of grid-connected PV plants also as providers (together with suitably controlled inverters) of reactive power has been proposed in several papers [19-25] each with its specific solutions. For example, the control proposed by [20] is obtained by neglecting the transformer magnetizing current. This allows the generation of reactive power also when the solar irradiation is the rated, giving the possibility to utilize a pre-existing plant to give a supplementary service. The validity of this control has been tested by means of a numerical simulation, which shows that, after a short transient (due to the PLL synchronization), active and reactive power delivered by PVs actually tracks the reference.

By adjusting the modulating signals of the PWM interface converter with the grid it is possible to regulate the active and reactive power in a decoupled manner. This has been proposed by [21,22]: the control scheme has been obtained by considering a first harmonic model (all the filters have been neglected) and by modeling the VSC as an ideal voltage source. Respect to the classical configurations, this algorithm shows benefits on grid current and voltage profiles.

The paper [18] proposes a control scheme based on an advanced control theory called Feed Back Linearization (FBL). This algorithm is implemented to be directly interfaced with an efficient MPPT controller and, also in this case, some simplification are necessary: in particular, the shunt section of the filters and the effects of non-ideal commutations of the involved devices have been neglected and a first harmonic model has been adopted for the inverter. The maximum power point tracking and the injection of reactive power are completely independent, and the possible variations of temperature and climatic conditions can be suitably taken into account. This new control technique allows to improve the control scheme discussed in [14].

For the sake of simplicity, it is sometimes preferable to use hysteresis regulator instead of PI ones. In [19] is proposed a control based on instantaneous power theory and with hysteresis current regulators. The instantaneous power theory for inverter makes it easy to control real and reactive power output on demands, while hysteresis current control, used for the PWM gating control, is simple and robust.

It is a pity that the PV array loses the output capability when the insolation is weak or it is night, which forces the whole system to be removed from the grid. Furthermore, the

frequent parallel operation and break-up actions make the control of the system difficult. To overcome the disadvantage of the grid-connected PV system, some multi-function inverters have been presented. The systems mentioned in the references [26,27] require auxiliary energy systems such as battery or fuel cell, which increases the cost of the systems. Some papers presented a method combining the grid-connected inverter with the three-phase rectifier to increase the performance of the PV system when the PV array stops working [28]. However, the DC loads are connected to the DC side of the inverter with the relays, which increases the complexity of the system. Paper [29] refers to the system that acts as a solar generator on sunny days and acts as an active power filter on rainy days. Nevertheless, the line-mode and the neutral line-mode methods mentioned in it are just valid in the single-phase three-wire system.

Since the reactive power compensation (RPC) does not strictly require the PV to be active, it can also be applied during the night. In the paper [24], for example, the active power output and the RPC of the system are realized simultaneously at daylight. When the insolation is weak or the PV modules are inoperative at night, the reactive current generated by the inverter is decided by the requirement of the load, which can be tuned properly and is regarded as the reference value of the reactive current of the inverter because the reactive power of the load, for the considered configuration, is low. If the reactive power of the load is larger (> 5kvar), the inverter only compensates a part of it by replacing the measured reactive current of the load with a proper portion value considering the limited capacity of the inverter. The spare reactive current of the load will be compensated with the other RPC equipments in the grid.

Other ancillary services by PV power plants

In addition to the RPC purpose, the converter can be controlled to comply multiple tasks, as for example the harmonic compensation (HC). The paper [25] focuses mainly on the RPC, which can be ensured whether PV source is available or not, but it also mentions the possibility of harmonic compensation. This aspect is fully faced in [23], where the authors analyze the possibility of using PV sources to regulate AC voltage and to suppress current harmonics injected by loads connected at the node of the PV system. The control of the converter is capable of reducing also higher harmonics of the current present in the grid.

Results of numerical simulations shown the effectiveness of the control proposed in this work. In particular, by using the suggested control, the total harmonic distortion (THD) can be reduced by about 7-10%, and the compensation action is performed better when no active power is supplied, for the reasons discussed above. The current harmonics can be further reduced incrementing the inverter switching frequency, that would lead to a different design of the regulators with lower oscillations of the inverter output voltage. Conversely, an increase of the inverter VA rating could reduce the THD at full power.

The compensation of harmonic distortion is proposed also in a single-phase PV system [30]. This paper adopts a repetitive controller and the power by the PV panels is controlled by a MPPT algorithm based on the incremental conductance method specifically modified to control the phase of the PV inverter voltage. The voltage controlled converter presented in this work behaves a shunt controller, improving the voltage quality in case of small voltage dips and in the presence of non-linear loads. Furthermore, it allows to control the grid frequency and the grid voltage by independently adjusting the active and reactive powers. Shunt controllers can be used as static var generators for stabilizing and improving the voltage profile in power systems and to compensate current harmonics and unbalanced load current. Simulation and experimental results validate the proposed solution in case of voltage dips and nonlinear loads.

Another different technique to provide not only active and reactive power compensation to the grid but to also participate in frequency and voltage regulation functions was presented in [31]. In this work, in addition, a power management scheme which would tap the future energy markets for regulation and create an enhanced value for PV systems was also proposed.

The proposed model comprises of a PV plant with Li-ion batteries coupled to the grid by means of a three phase inverter (see Fig. 4). Energy storage systems, in fact, are promising technologies which may work in conjunction with PV systems to regulate frequency and voltage, and can help to decreasing the impact of intermittency of the PV source and increasing the reliability and flexibility of the system.

The technique suggested in this work allows PV systems to deliver a variable amount of power based on the amount demanded from the grid. This enable load following capability along with frequency regulation. A controller is implemented in order to generating/absorbing the maximum active and reactive powers that the system can handle.

Other ancillary services, such as power factor correction and voltage and/or current unbalance compensation, can be also included in the tasks of a grid-connected photovoltaic power plant. This is the case of [32], where the control of a distributed energy (DE) system is based on instantaneous non-active power theory. In this paper, three control schemes, including non-active current compensation, power factor correction, and voltage regulation, have been developed and implemented in a parallel-connected DE system. Simulations and experiments performed on this system have shown that DE is feasible for providing non-active-power-related ancillary services.

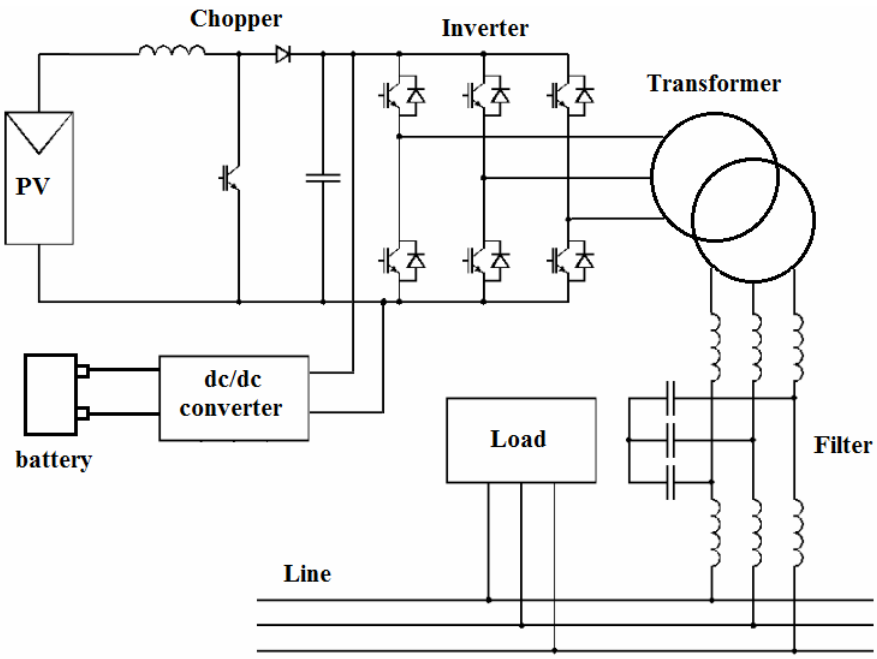

Figure 4. *Addition of a Li-ion Battery to the traditional circuit configuration for a grid-connected photovoltaic power plan*

One way of operating for a PV power plant is the island mode, and the islanding detection is an important features which a PV system control can be provided with, i.e. [33] proposed an autonomous controller integrating fast voltage regulation and islanding detection facilitation functions (through reactive power control) for inverter-based DGs, with particular reference to PV systems. An adaptive voltage reference generation mechanism ensures that the DGs at different locations (main feeder or branch feeder) can coordinate with each other in voltage regulation. Since autonomous control does not have communication involved, fast voltage regulation can be achieved without communication delay. This controller can successfully distinguish between islanding and other events in the system, increasing, hence, the system reliability. This controller was implemented on a PV inverter prototype.

Simulation and experimental results are provided to verify the effectiveness of the proposed controller.

Transient conditions and Centralized control system for multiple PV power plants

In a PV system, rapidly varying irradiance conditions may cause voltage sags and swells that cannot be compensated by slowly responding utility equipment resulting in a degradation of power quality. The variability of PV generation can occur on a very short timescale and this creates a stability problem, especially in multiple PV source power plant. Dispersed generators hardly ever take part in voltage and power (or frequency) control of the grid. If a disturbance occurs, the generators are disconnected, amongst others to avoid islanding, and are reconnected when normal operation has been resumed. Thus, the power balance and voltage are maintained by controlling the large power plants. This is possible as long as penetration of dispersed generators is still low.

With current operating practices, neither the load nor the dispersed power generators contribute to controlling and stabilizing the power system, whereas the power generated by dispersed generators depends heavily on the availability of the renewable source [20,31,36]. When the penetration of dispersed generators increases significantly, it will no longer be possible to run a power system by only controlling the large-scale power plants. Also the practice to disconnect dispersed generators in case of disturbances can no longer be maintained as this will make the problem worse because of loss of more power. The problem can be faced either by a local control approach, or by considering the whole plant control issue.

A local control scheme aimed to maintain voltage regulation under difficult transient conditions and to minimize the thermal losses in circuit is proposed in [37]. The control dispatches reactive power from each PV inverter based on local instantaneous measurements of the real and reactive components of the consumed power and the real power generated by the PVs. Using one adjustable parameter per circuit, the authors balance the requirements on power quality and minimize thermal losses. The control scheme is obtained approximating the power flow equations by the linear equations known as LinDistFlow under the assumption that the losses values are small. Furthermore, voltage variations along the circuit must stay within strict regulation bounds. The performance of this proposed control scheme has been evaluated via numerical simulations of realistic rural lines in several generation/consumption

scenarios. Simultaneous improvement of both the power quality and the magnitude of losses have been observed for all the scenarios, even when the renewable generation is in excess of the circuit own load.

A decentralized control approach has also been proposed by [38], which use a non-linear autoadaptive controller for reducing system losses by the optimal management of the reactive power supplied by the inverters of PV units. Owing to the decentralization of the controller, the control laws are locally evaluated at a generating unit level. The control design is based on an optimization procedure involving the sensitivity theory in conjunction with the Lyapunov function. In particular, the controller is based on an artificial dynamic system whose dynamics are explicitly designed to be stable by adopting the Lyapunov theory. This dynamic system produces the control laws acting as references of the PV inverter local controller. Dynamics are also designed to be adequately damped out in order to obtain fast asymptotic convergence to the equilibrium point, with minimal or no oscillations. Nevertheless, PV inverters must operate in a decoupled manner in order to provide the reactive power imposed by the control law and to transfer the active power produced by PV modules. The experiences and results conducted in an indoor laboratory, as well as on an actual distribution network, demonstrate its effectiveness in reducing system losses. However, this decentralized method, to generate the control laws, requires measurements at the substation transformers as well as at the node where the PV plant is connected.

The distributed nature of residential PV generation implies that real power is injected at many points along the circuit making it no longer possible to obtain reliable estimates of the power flows throughout the circuit from a few measurements of current made at a few discrete locations. At high levels of PV penetration on a distribution circuit this suggests a centralized control system which is aimed to solve the full optimization problem and capable to assure the necessary stability against PV systems generation variability (see Fig. 5). In [37] is carried out a comparison between centralized and decentralized control system. This paper shows how distributed control of reactive power can serve to regulate voltage and minimize resistive losses in a distribution circuit that includes a significant level of PV generation. But it is also shown that for realistic feeder lines, a simple local control technique can achieve only 80% of savings in losses when compared to a centralized control based global optimum.

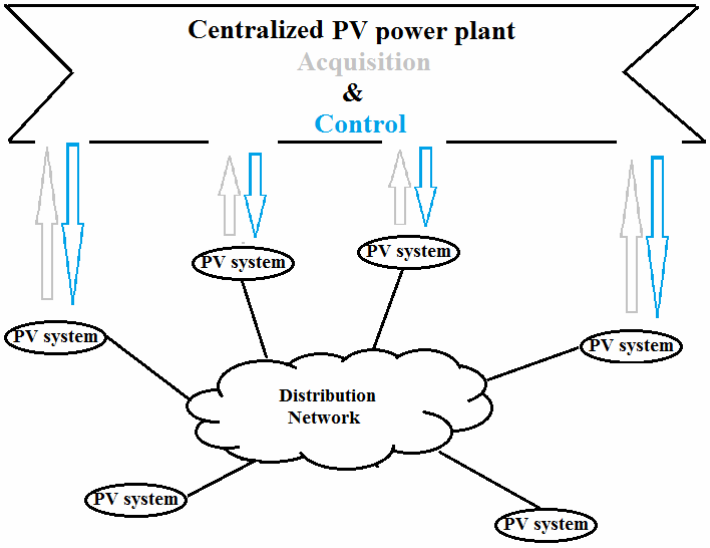

Figure 5. *Centralized control approach for PV power plant system*

Afterwards, in [39] is discussed and compared via simulation various design options for control systems underlining what weighs on the speed and quality of communication required is whether the control should be centralized or distributed. In this work are considered the benefits of choosing different local variables on which to control and how the control system can be continuously tuned between robust voltage control and loss minimization: voltage regulation and loss minimization are in competition and that, in general, prohibits control schemes for achieving a global optimum.

For a DG unit plants, a centralized control can choose to implement different goals depending of the state of the entire system and taking into account the requirements of the customers. In [36] is showed how a selected number of DG units (in particular, fuel cells and photovoltaic cell-based systems), interconnected onto a network distribution through power electronic interfaces, can be coordinated by a centralized control system in order to provide the usual energy service as well as some ancillary services, such as reactive power control and compensation for some continuous PQ disturbances (waveform distortions, unbalances, and voltage fluctuations). This centralized approach allows the coordination of the actions of the DG units and permits more effective improvement of the operational conditions of the entire distribution system. Furthermore, the control system can operate with strategies aimed at either compensating for the disturbances in the busbars of the whole system or in some areas of the network where there are customers whose needs require enhanced power quality control. In particular, [36] it reports the modeling of the considered DG units and the theoretical aspects regarding the centralized control system. The selected DG units can also

provide load following (in grid-connected mode) and back-up services (in island mode) to a local, privileged load. When the DG units operate in grid-connected mode, adequate control of their DC/AC converters also permits them to compensate for reactive powers, waveform distortions, voltage unbalances, and voltage fluctuations either at all system buses or at particular areas (a set of buses) with more sensitive loads.

The results are schematically shown in Table 1 that gives the opportunity to be aware of what was already done, intended to be used as a reference tool.

Table 1. Main proposals in recent technical literature

Authors	**Year**	**Ancillary service**	**Notes**
Andreotti A., Rizzo R. *et al.*	2010	1	Generation of reactive power also when the solar irradiation is the rated.
Angelino R. *et al.*	2009a,b	1, 4, 7	A centralized control scheme can operate with strategies aimed at either compensating For the disturbances in the busbars of the whole system or in some areas of the network. Adequate control of the DC/AC converters of the DG units operating in grid-connected mode, permits to compensate for reactive powers, waveform distortion, voltage unbalances and voltage fluctuations.
Batt R., Chowdhury B.	2011	1, 4, 8	PV system can deliver a variable amount of power based on the amount demanded from the grid. Generation/absorption of the maximum active and reactive powers that the system can handle. Use of batteries to increasing the reliability and flexibility of the system.
Cagnano A. *et al.*	2011	1, 2	Controller based on an artificial dynamic system that produces the control laws acting as references of the PV inverter local controller. Dynamics designed to obtain fast asymptotic convergence to the equilibrium point, with minimal oscillations.
Delfino F. *et al.*	2008	1	Characterization of the AC side of the PV System by means of a capability curve.
Delfino F. *et al.*	2010a	1	MPPT and injection of reactive power completely independent. Possibility to take into account variations of temperature and climatic conditions.
Delfino F. *et al.*	2010b	1	Evaluation of all the set of points in the P-Q plane that can be reached in correspondence to all of the possible inputs with low computational costs.
Delfino F., Procopio R.	2008	1	Decoupled control of active and reactive power. Choice of the reference quantity for the design of the regulators. Benefits on grid current and voltage profiles.
Filgueira V. A. *et al.*	2011	1, 7	The photovoltaic system can generate the maximum power available from the solar source, and, at the same time, can contributing to the voltage regulation of the grid and to the suppression of the current harmonics absorbed by loads. THD can be reduced by about 7-10%. The compensation action is performed better when no active power is supplied.

Authors	Year	Ancillary service	Notes
Mastromauro R. A. *et al.*	2009	1, 7	Improved voltage quality in case of small voltage dips and in the presence of non-linear loads. Control of the grid frequency and the grid voltage by independently adjusting the active and reactive powers.
Piegari L., Tricoli P.	2010	1	Control of both real and reactive power. Choice of the references in order to maximize the electrical energy generated by PV arrays and to exploit the apparent power of the inverter close to its rated value.
Pyo G. *et al.*	2008	1	Inverter control scheme based on instantaneous power theory and hysteresis current control. Voltage profile in distribution system improved by the PV system, without additional costs.
Turitsyn K. *et al.*	2010a	1, 2	Possibility to adjust the reactive power according to the local values of consumption and real PV generation. The local scheme allows significant improvement in global power quality and global reduction of losses.
Turitsyn K. *et al.*	2010b	1, 2	Optimal dispatch of each inverter reactive power to both maintain the voltage within an acceptable range and minimize the losses over the circuit.
Turitsyn K. *et al.*	2011	1	Control of reactive power injection at each PV inverter in order to minimize thermal losses. Voltage maintained within acceptable bounds thanks to local control schemes.
Xu Y. *et al.*	2005	1, 7, 10	Configuration applicable to all the non-active-power-related ancillary services from DE. Non active power compensation, current harmonic compensation, and current unbalance, are achieved by controlling the current of the parallel-connected DE system.
Yan Zhou *et al.*	2011	1, 9	DGs at different locations can coordinate with each other in voltage regulations by means of an adaptive voltage reference generation mechanism. Fast voltage regulation achieved without communication delay. Increased reliability of the system: the controller can distinguish between islanding and other events. Islanding detection function realized without affecting the system power quality.
Yu H. *et al.*	2005	1	Reactive current generated by the inverter is set by the requirement of the load. When the insolation is weak or the PV modules are inoperative at night, the function of RPC can still be used. The repeated parallel operation and break-up are avoided, which provides flexible integration of the PV system into the grid.
Wijnbergen S. *et al.*	2005	1, 8	Independent control of the active and reactive current of the power electronic interface. Active and reactive power generation derived from the measured frequency and voltage.
Lopes J.A.P. *et al.*	2005		Control technique with the objective of optimizing network operation are investigated by analyzing the impact of the proposed control procedures in distribution networks.

Conclusion

The possibility of using renewable energy sources also for providing ancillary services has been recently considered and many technical proposals were published in the literature. Switching power converters are in fact used to regulate the injection of power into the grid in order to achieve a maximization of the energy delivered by the renewable source, the utilization of power converters give the opportunity to provide ancillary services too. Even if FERC identify six ancillary services, as pointed out in the introduction, other ancillary services can be considered, such as scheduling and dispatch, load-following, reliability, loss replacement and energy imbalance.

In the paper have been critically analyzed the most interesting papers published in last decade and the main characteristics of the technical proposals, with their advantages and limits, have been evidenced. The results are also schematically pointed out in a table that immediately give the reader the opportunity to be aware of what was already done, representing an useful reference and starting point for the development of new proposals.

References

1. Piegari L., Rizzo R., *A control technique for doubly fed induction generators to solve flicker problems in wind power generation*, Proc. Power and Energy Conference PECon 2006, Malaysia, 2006, pp. 19-23.
2. Piegari L., Rizzo R., Tricoli P., *High efficiency wind generators with variable speed dual-excited synchronous machines*, Proc. International Conference on Clean Electrical Power 2007, Capri (Italy), 2007, pp. 795-800.
3. Bo Yang, Wuhua Li, Yi Zhao, Xiangning He, *Design and Analysis of a Grid-Connected Photovoltaic Power System*, IEEE Trans. Power Electronics, vol. 25, 2010, pp. 992-1000.
4. Cipriani G., Di Dio V., Di Noia L.P., Genduso F., La Cascia D., Miceli R., Rizzo R., *A PV plant simulator for testing MPPT techniques*, Proc. 4th International Conference on Clean Electrical Power, Alghero (Italy), 2013, pp. 483-489.
5. Hirst E., Kirby B., *Electric-Power Ancillary Services*, ORNL/CON-426, Oak Ridge National Laboratory, Oak Ridge, TN,1996.

6. Brando G., Dannier A., Del Pizzo A., Rizzo R., *A generalized modulation technique for multilevel converters*, Proc. POWERENG 2007 International Conference on Power Engineering Energy and Electrical Drives, Setubal (Portugal), 2007, pp. 624-629.
7. Brando G., Coccia A., Rizzo R., *Control method of a breaking chopper to reduce voltage unbalance in a 3-level chopper*, Proc. IEEE International Conference on Industrial Technology, Ajaccio (France), 2004, vol. 2, pp. 975-978.
8. Brando G., Rizzo, R., *An optimized algorithm for torque oscillation reduction in DTC-Induction motor drives using 3-Level NPC inverter*, IEEE International Symposium on Industrial Electronics, Ajaccio (France), 2004, pp. 1215-1220.
9. Pagano E., Piegari L., Tricoli P., *Approaches to analytical analysis of active filter behavior*, Proc. 29th Annual Conference of the IEEE Industrial Electronics Society (IECON'03), 2003, Roanoke, U.S.A, 3, pp. 2017-2022.
10. Brando G., Dannier A., Rizzo R., *A sensorless control of H-bridge multilevel converter for maximum power point tracking in grid connected photovoltaic systems*, Proc. International Conference on Clean Electrical Power 2007, Capri (Italy), 2007, pp. 798-794.
11. Piegari L., Rizzo R., Tricoli P., *A Comparison between Line-Start Synchronous Machines and Induction Machines in Distributed Generation*, Przeglad Elektrotechniczny (Electrical Review), 2012 - R. 88 NR 5b/2012, 187-193.
12. Rizzo R., Tricoli P., *Power Flow Control Strategy for Electric Vehicles with Renewable Energy Sources*, Proc. Power and Energy Conference PECon 2006, Malaysia, pp. 34-39.
13. Rizzo R., Tricoli P., Spina I., *An innovative reconfigurable integrated converter topology suitable for distributed generation*, Energies, 5 (9), 2012, pp. 3640-3654.
14. Delfino F., Procopio R., *Photovoltaic Generating Units as Reactive Supply Ancillary Service Providers*, Int. Journal Emerging Electric Power Systems, 9, 3, 2008.
15. Guttromson R. T., *Modeling distributed energy resource dynamics on the transmission system*, IEEE Transactions on Power Systems, vol. 17, 2002, pp. 1148 – 1153.
16. Miller N., Ye Z., *Report on Distributed Generation Penetration Study*, Report NREL/SR-560-34715, NREL – National Renewable Energy Laboratory, U.S. Dept. of Energy, Golden, Colorado, 2003.
17. Delfino F., Denegri G. B., Invernizzi M., Procopio R., *Performance and control of PhotoVoltaic systems supplying both primary and ancillary services*, Proc. 43th UPEC Int. Universities Power Engineering Conf., 2008, Padova, pp. 1463 - 1468.

18. Delfino F., Procopio R., Rossi M., Ronda G., *Integration of large-size photovoltaic systems into the distribution grids: a P–Q chart approach to assess reactive support capability*, IET Renewable Power Generation, vol. 4, 2010, pp. 329–340.
19. Pyo G., Kong H., Moon S., *A new operation method for grid-connected PV system considering voltage regulation in distribution system*, Proc. IEEE PES GM Conference, 2008, Pittsburgh USA, pp.1-7.
20. Andreotti A., Del Pizzo A., Rizzo R., Tricoli P., *An efficient architecture of a PV plant for ancillary service supplying*, Proceedings of International Symposium on Power Electronics Electrical Drives Automation and Motion (SPEEDAM 2010), Pisa (Italy), June 2010, pp. 678 – 682.
21. Delfino F., Denegri G. B., Invernizzi M., Procopio R., (), *The Use of a Static Series Compensator (SSC) for the Mitigation of Voltage Sags in a Radial Distribution Network*, Proc. of the IEEE Conference Power Tech 2007, Lausanne (CH), pp. 1492 - 1497.
22. Delfino F., Procopio R., *The Use of the SSC as Reactive Power Compensator*, Electrical Power Quality and Utilization (EPQU) Journal, vol. 13, 2007, pp. 39-47.
23. FilgueiraVizoso A., Piegari L., and Tricoli P., (), *A Photovoltaic Power Unit Providing Ancillary Services for Smart Distribution Networks*, International Conference on Renewable Energies and Power Quality (ICREPQ'11), 2011, Gran Canaria, pp. 1-6.
24. Yu H., Pan J., Xiang A., *A multi-function grid-connected PV system with reactive power compensation for the grid*, Solar energy, vol. 79, 2006, pp. 101-106.
25. Piegari L., Tricoli P., *A Control Algorithm of Power Converters in Smart-Grids for Providing Uninterruptible Ancillary Services*, 14th International Conference on Harmonics and Quality Power (ICHQP 2010), Bergamo, pp. 1-7.
26. Ro K., Rahman S., *Two-loop controller for maximizing performance of a grid-connected photovoltaic-fuel cell hybrid power plant*, IEEE Transactions on Energy Conversion, vol. 13, 1998, pp. 276–281.
27. Takigawa K., Okada N., Kuwabara N., Kitamura A., Yamamoto F., *Development and performance test of smart power conditioner for value-added PV application*, Solar Energy Materials and Solar Cells, vol. 75, 2003, pp. 547–555
28. Wu, T.F., Chang, C.H., Chen, Y.K., (), *Multi-function photovoltaic power supply system with grid-connection and power factor correction features*, IEEE Annual Power Electronics Specialists Conference, 2000, pp. 1185–1190.

29. Kuo Y.-C., Liang T. J., Chen J.-F., *A high-efficiency single-phase three-wire photovoltaic energy conversion system*, IEEE Transactions on Industrial Electronics, vol. 50, 2003, pp. 116-122.
30. Mastromauro R. A., Liserre M., Kerekes T., Dell'Aquila A., *A single-phase voltage-controlled grid-connected photovoltaic system with power quality conditioner functionality*, IEEE Trans. Industrial Electronics, vol. 56, 2009, pp. 4436-4444.
31. Batt R., Chowdhury B., *Grid Frequency and Voltage Support Using PV Systems with Energy Storage*, 43rd North American Power Symposium, Boston, Massachusetts, 2011.
32. Xu Y., Tolbert L. M., Rizy D. T., Kueck J. D., *Nonactive-Power- Related Ancillary Services Provided by Distributed Energy Resources*, Proc. of the IEEE/PES General Meeting, Tampa FL, 2005, pp. 1-7.
33. Yan Zhou, Liming Liu, Hui Li, *Autonomous Control Integrating Fast Voltage Regulation and Islanding Detection for High Penetration PV Application*, Proc. 26th IEEE Applied Power Electronics Conference and Exposition (APEC'11), Fort Worth USA, 606-612.
34. Brando G., Dannier A., Del Pizzo A., Rizzo R., *Power Electronic Transformer for Advanced Grid Management in Presence of Distributed Generation*, International Review of Electrical Engineering (I.R.E.E.) – Praise Worthy Prize, vol. 6, 2011, pp. 3009-3015.
35. Dannier A., Rizzo R., A*n overview of Power Electronic Transformer: Control strategies and topologies*, Proc. SPEEDAM International Symposium on Power Electronics, Electrical Drives, Automation and Motion, Ischia, 2012, 1552-1557.
36. Angelino R., Bracale A., Carpinelli G., Lauria D., Mangoni M., and Proto D., *Centralized Control of Dispersed Generators Providing Ancillary Services in Distribution Networks*, 44th International Universities' Power Engineering Conference (UPEC'09), Glasgow, pp. 1-5.
37. Turitsyn K., Sulc P., Backhaus S., Chertkov M., *Local control of reactive power by distributed photovoltaic generators*, Proc. 2010 IEEE SmartGridComm, Gaithersburg MD, pp. 79-84.
38. Cagnano A., De Tuglie E., Liserre M., and Mastromauro R. A., *Online Optimal Reactive Power Control Strategy of PV Inverters*, IEEE Transactions on Industrial Electronics, vol. 58, 2011, pp. 4549-4558.
39. Turitsyn K., Sulc P., Backhaus S., Chertkov M., *Options for Control of Reactive Power by Distributed Photovoltaic Generators*, Proc. IEEE special issue on Smart Grid, vol. 6, 2011, pp. 1063-1073.