Leonardo Electronic Journal of Practices and Technologies
ISSN 1583-1078
Issue 31, July-December 2017
p. 23-44

Engineering, Environment

Reconfiguration and capacitor allocation in radial distribution systems with a new Independent loop identification method

Sanaz SAMARGHANDI[1], Mitra SARHANGZADEH[*]

[1,2]*Department of Electrical Engineering, Tabriz Branch, Islamic Azad University, Tabriz, Iran*
E-mail(s): [1]samargandi_s@yahoo.com, [2]mitsarhang@iaut.ac.ir
[*] Corresponding author, phone: +98-411-3396118. Mob. +98-914-1058917

Received: April 14, 2017/ Accepted: November 25, 2017 / Published: December 30, 2017

Abstract

This paper presents an algorithm for reconfiguration associated with capacitor allocation to minimize energy losses and improving network voltage profile on radial electrical networks considering new algorithm to independent loop identification. An analytical expression to calculate the optimal capacitor size and location and Genetic algorithm for reconfiguration are used in this study. The proposed methodology was tested and validated in IEEE 33-bus distribution test system.

Keywords

Independent; Loop distribution network reconfiguration; Capacitor allocation; Analytical method

Introduction

Distribution systems have been operated radially to facilitate their protection scheme and reduce the short circuit current. Therefore, each load point is fed by a route through the system components to the substation. So, these systems have low reliability, low voltage and high-power loss. Feeder reconfiguration is the process of changing the topology of distribution network by altering the open/closed status of switches. The switching devices include: (i) sectionalizing or normally closed switches; (ii) tie or normally open switches. Since by status change of switches, the power flow to loads will be changed and consequently affects the power loss, voltages, as well as the system reliability, hence in normal operation condition can improve the distribution network performance and reduce the cost by selecting the correct status of switches [1-5]. Reactive power flow in a distribution network always

cause high power losses. The reactive power support is one of the well-recognized methods for the reduction of power losses together with other benefits; such as loss reduction, power factor correction, voltage profile improvement to the utmost extent under various operating constraints. The shunt capacitor is one of the basic equipment to fulfil these objectives.

Therefore, it is important to find optimal location and sizes of capacitors in the system to achieve the above-mentioned objectives [6-11]. Reconfiguration and capacitor allocation procedures in radial electrical distribution systems are attractive alternatives for power flow control, improving system stability, power factor correction, voltage profile management, and losses minimization [12-14]. Reconfiguration approaches are well discussed in [3–5] whereas capacitor/DG allocation is addressed in [9-11]. Both the capacitor allocation and the reconfiguration problems are discussed in [12-14]. The network reconfiguration was introduced by Merlin and Back [1] in 1975, to reduce the power loss using branch-and-bound type heuristic technique. In 1990, the switch exchange method was proposed by Carlos, Castro and Ander [2]. The algorithm was tested in 17-node, three feeder networks and established switching operations to reduce power losses.

The reach of convex relaxations of the AC power flow equations to reconfiguration problems with binary decision variables is extended in [3], such as minimal power loss, load balancing and power supply restoration. Naveen, Sathish Kumar and Rajalakshmi [4] proposed a heuristic type algorithm to find the tie switch position in each loop to reduce the loss. In this paper, the network reconfiguration problem is formulated as non-linear objective optimization problem. The modified bacterial foraging algorithm is described in a general context and then applied specifically to the network reconfiguration problem. The heuristic methods are usually fast but may not achieve the optimal configuration. Therefore, meta-heuristic algorithms have gradually been utilized to minimize the loss, such as GA [5]. In this paper, the enhanced genetic optimization algorithm is used to handle the reconfiguration problem to determine the switch operation schemes. Based on the information of a single loop caused by closing a normally open switch, we improve the algorithm on crossover and mutation operations of original Genetic Algorithms.

An efficient approach for capacitor allocation in radial distribution systems that determine the optimal locations and sizes of capacitors with an objective of power loss reduction and improving voltage profile with heuristic algorithms is presented in [6-8]. But the results of heuristic methods are not reliable, then using analytical methods for capacitor

placement will be useful. An analytical expression to calculating optimum size and location for DG (Distributed Generation)/capacitor is proposed in [9-11] and the objective of DG/capacitor placement is to reduce the losses.

The proposed methodology is suitable for allocation of DG in each distribution network. Until 2001, most previous studies handled reconfiguration problems without considering the capacitor addition, or handled capacitor compensation problems without considering feeder reconfiguration. They dealt with the feeder reconfiguration and capacitor addition in a separate manner, which may result in unnecessary losses and cannot yield the minimum loss configuration. The simulated annealing method to determine the feeder reconfiguration and capacitor settings for optimal loss minimization of distribution systems is used in [2]. An algorithm that performs the capacitor allocation after the reconfiguration, in order to reduce losses and improving voltage profile, is proposed in [13] too, considering different load levels. The proposed model is solved using a mixed integer non-linear programming approach, in which a continuous function is used to handle the discrete variables. Unfortunately, the handling of discrete variables is not well explained. Besides, the decoupled analysis among different load levels may cause the algorithm to miss some good quality solutions. The network reconfiguration and capacitor placement are employed simultaneously too in [14], to reduce energy losses and improve the system reliability subjected to satisfy operational and power quality constraints using a fuzzy approach. This paper, extending the problem formulation of previous researches on capacitor optimization presents an efficient approach for capacitor placement in radial distribution systems that determine the optimal locations and size of capacitor with an objective of power loss reduction and improving the voltage profile. Also, GE (Genetic Algorithm) is used to reconfiguration. In this paper, the network reconfiguration and capacitor placement are simultaneously employed to enhance the system efficiency in a multi-objective optimization problem. Despite to previous papers, where Independent loops were not identified, identification of Independent loops is the main section of this paper, where describes is section 2.

Material and method

Independent loop identification in large distribution network

Reconfiguration consists of changing the network topology through toggling the statuses of sectionalizing switches that are strategically installed in certain system locations. Finding the best configuration may be a hard task for large systems, especially those with many sectionalizing switches. Also, identification of Independent loops in a large network is difficult too.

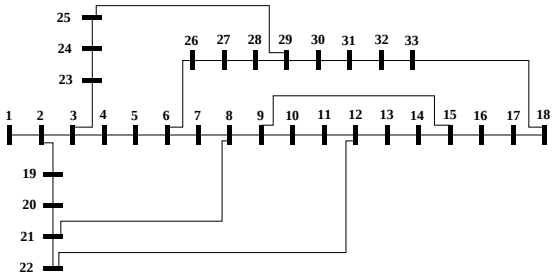

Figure 1. Single line diagram of IEEE 33-Bus test distribution network

In this section, an algorithm is proposed to identify Independent loops of a network. The proposed methodology is tested on 33-Bus test distribution network. Single line diagram of the test system is shown in Figure 1, contains 33 buses and 37 branches. It is a loop system with the total load of 3.72 MW and 2.3 MVAR. Table 1 presents data of network.

Table 1. IEEE 33-Bus test distribution network data

Section ID	From Node	To Node	R (ohm)	X (ohm)	P_L (kw)	Q_L (kw)	Section ID	From Node	To Node	R (ohm)	X (ohm)	P_L (kw)	Q_L (kw)
1	1	2	0.0922	0.047	100	60	20	20	21	0.4095	0.4784	90	40
2	2	3	0.493	0.2511	90	40	21	21	22	0.7089	0.9373	90	40
3	3	4	0.366	0.1864	120	80	22	3	23	0.4512	0.3083	90	50
4	4	5	0.3811	0.1941	60	30	23	23	24	0.898	0.7091	420	200
5	5	6	0.819	0.707	60	20	24	24	25	0.896	0.7011	420	200
6	6	7	0.1872	0.6188	200	100	25	6	26	0.203	0.1034	60	25
7	7	8	0.7114	0.2351	200	100	26	26	27	0.2842	0.1447	60	25
8	8	9	1.03	0.74	60	20	27	27	28	1.059	0.9337	60	20
9	9	10	1.044	0.74	60	20	28	28	29	0.8042	0.7006	120	70
10	10	11	0.1966	0.065	45	30	29	29	30	0.5075	0.2585	200	600
11	11	12	0.3744	0.1238	60	35	30	30	31	0.9744	0.963	150	70
12	12	13	1.468	1.155	60	35	31	31	32	0.3105	0.3619	210	100
13	13	14	0.5416	0.7129	120	80	32	32	33	0.341	0.5302	60	40
14	14	15	0.591	0.526	60	10	33	25	29	0.160	0.150	120	70

15	15	16	0.7463	0.545	60	20	34	33	18	0.160	0.150	120	40
16	16	17	1.289	1.721	60	20	35	9	15	0.360	0.250	60	10
17	17	18	0.732	0.574	90	40	36	22	12	0.360	0.350	60	35
18	2	19	0.164	0.1565	90	40	37	21	8	0.280	0.220	200	100
19	19	20	1.5042	1.3554	90	40							

The computational procedure to find the independent loops in a distribution network is described below:

1. Find nodes from "to node" column in Table 1, where repeated two times (these nodes in IEEE 33-Bus test distribution network data are 29, 18, 15, 12 and 8);
2. Find paths of each node in step 1, from nodes to first node. (As shown in Figure 2, these paths in IEEE 33-Bus test distribution network are L1_29, L2_29, L1_15, L2_15, L1_15, L2_15, L1_12, 2_12, L1_8 and L2_8). Each node has two paths.

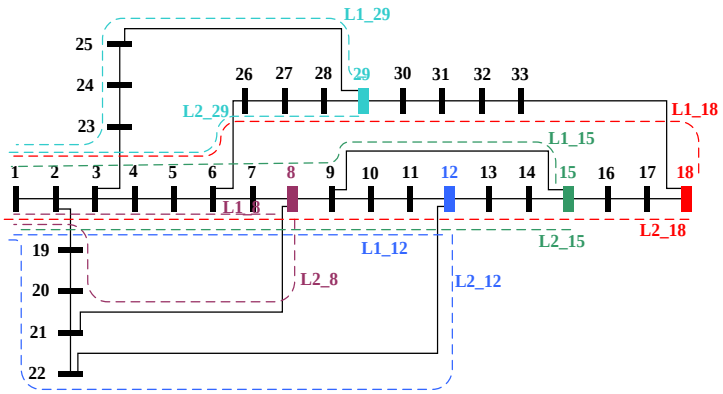

Figure 2. Directions of first node to loop nods in IEEE 33-Bus test distribution network

3. Delete common sections in two paths of each node of steps 1 and 2 to creation of Loops. (As shown in Figure 3, there are 5 loops in IEEE 33-Bus test distribution network, but they are not independent loops).

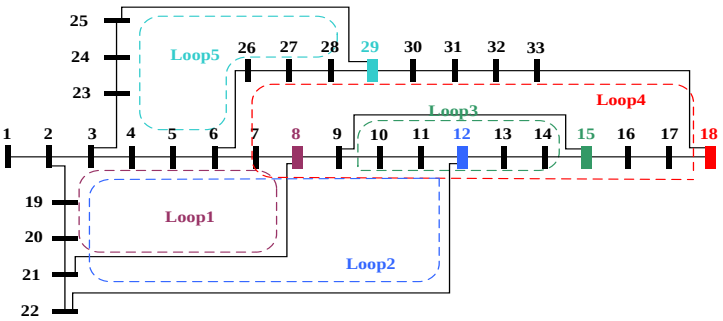

Figure 3. Loops of loop nods in IEEE 33-Bus test distribution network

4. Find independent loops from loops of step 3 as below: Compare each loop of step 3 with each other. If i-th loop has LNoi sections and j-th one has LNoj sections and the

common sections are LM, then Number of distinct section in i-th loop is LDi=LNoi-LM and the distinct sections of j-th one is LDj=LNoj-LM.

- If LNoi > (LDi+LDj) or LNoj > (LDi+LDj) then:
  - If (LNoi - (LDi+LDj)) > (LNoj > (LDi+LDj)) then divide these loops to two independent loops: j-th loop and the new loop with distinct sections of i and j-th loops;
  - If (LNoi - (LDi+LDj)) < (LNoj > (LDi+LDj)) then divide these loops to two Independent loops: i-th loop and the new loop with distinct sections of i and j-th loops.
- If i is not loops of step 4.1 then, i- th loop is independent loop.

Reconfiguration algorithm

Proper switching of tie and sectionalizing switches of the network, typically known as reconfiguration, may result in a significant loss reduction or voltage improvement in the network. The method which is employed in this paper for simultaneous feeder reconfiguration is the modified version of graph theory for distribution feeder reconfiguration. This method consists of below steps:

1. Opening one section of each Independent Loop to have a radial network;
2. Checking if the network is radial and all nodes are feeds from network or no:
   - Dependence matrix ($M_{BusNo*SectionNo}$) is developed as Eq. (1), where "Bus No" is number of buses and "Section No" is number of sections:

$$M_{ij} = \begin{cases} 1 & if \quad i-th\ bus\ is\ connected\ to\ \ j-th\ section \\ 0 & if \quad i-th\ bus\ is\ not\ connected\ to\ \ j-th\ section \end{cases} \tag{1}$$

   - Dependence matrix Degree ($MD_{BusNo*1}$) is developed as Eq. (2) from M:

$$MD_i = \sum_{j=1}^{SectionNo} M_{ij}; \tag{2}$$

   - Eliminate node with $MD_i=1$ and the connected section from network;
   - Repeat from 2.1 for 2*BusNo times;
   - If MD matrix size is one*one, the network with opened sections in step 1 is accepted else the selected opened sections is not accepted.

Capacitor placement algorithm

Optimal allocation of shunt capacitors on radial distribution systems is essential for power flow control, improving system stability, power factor correction, voltage profile management, and losses minimization. The solution techniques for the capacitor allocation problem can be classified into four categories: analytical, numerical programming, heuristic and artificial intelligence-based (AI-Based). This paper presents an efficient approach for capacitor placement in radial distribution systems that determine the optimal locations and size of capacitor with an objective of reduction of power loss and improving the voltage profile.

Backward/forward load flow method is used for calculation of active and reactive power loss and node voltages in this paper. Note that for a given configuration of a single-source radial network, the active power loss cannot be minimized because all active power must be supplied by the source at the root node. However, the reactive power loss can be minimized by supplying part of the reactive power demands locally.

The optimal size and location of capacitor results in minimum loss in the distribution system. Considering N bus distribution system, network may be formulated as given below active loss [5-6], Eq. (3):

$$P_L = \sum_{i=1}^{N} \sum_{j=1}^{N} [\alpha_{ij}(P_i P_j + Q_i Q_j) + \beta_{ij}(Q_i P_j - P_i Q_j)] \tag{3}$$

Where: α and β are coefficients as Eq. (4):

$$\alpha_{ij} = \frac{r_{ij}}{V_i V_j}\cos(\delta_i - \delta_j); \quad \beta_{ij} = \frac{r_{ij}}{V_i V_j}\sin(\delta_i - \delta_j) \tag{4}$$

Where: $Z_{bus} = [Y_{bus}]^{-1}$ is impedance matrix; $r_{ij} = real(Z_{ij})$, $x_{ij} = imag(Z_{ij})$ are the real and imaginary parts of impedance matrix; $V_i < \delta_i$ is voltage of i-th bus; P_i and Q_i are injected active and reactive power of i-th bus.

To minimize network loss with capacitor installation, the rate of change of losses with respect to injected reactive power is zero as Eq. (5):

$$\frac{\partial P_L}{\partial Q_i} = 2\alpha_{ii} Q_i + 2\sum_{\substack{j=1 \\ j \neq i}}^{N} (\alpha_{ii} P_j - \beta_{ij} Q_j) \tag{5}$$

Where: Q_i=Q_{Ci}-Q_{Di} is injected reactive power, Q_{Ci} is capacitor reactive power and Q_{Di} is load reactive power in i-th bus. Therefore, equation (5) can be rewritten as bellows, Eq. (6):

$$Q_{Ci} = Q_{Di} - \frac{1}{\alpha_{ii}}\left(\sum_{\substack{j=1 \\ j\neq i}}^{N}(\alpha_{ii}P_j - \beta_{ij}Q_j)\right) \tag{6}$$

Equation (6) gives the size of capacitor at each bus. If this capacitor placed at i-th bus gives the minimum real power loss compared to the same capacitor placed at any other bus. Where: i-th bus is the optimal location to place this capacitor. Any size of capacitor other than Q_{Ci} and placed at bus *i*, will lead to higher losses. In this study, both of loss and voltage profile is important is placing capacitor and the placement algorithm is as below:

1. Base load flow (backward/forward) and computing network loss ($P_{LossBase}$) with equation (1) and voltage sensitivity with equation (7).

$$V_{SensBase} = \sum_{j=1}^{BusNo}\left((\| V_j | -1|) \times \frac{P_{Lj}}{\sum_{i=1}^{BusNo} P_{Li}}\right) \tag{7}$$

Where: PL_j is active load of j-th bus.

2. Computing capacitor size for each bus with equation (6).
3. Placing each capacitor of step 2 in its bus and computing network loss (P_{Loss}) with equation (3) and voltage sensitivity (V_{sens}) with equation (7).
4. Computing cost function for each bus as equation (8).

$$F_{Cost} = W_1 \times \frac{PLoss_{Sens}}{PLoss_{Sensbase}} + W_2 \times \frac{V_{Sens}}{V_{Sensbase}} \tag{8}$$

Where: W_1 and W_2 are weights and W_1+ W_2=1.

5. Sort F_{cost} function for buses and accept the bus with minimum cost as best bus to set capacitor with the size of step 2.

Proposed methodology

In this section, related to previous sections, the proposed methodology is described to find independent loops, reconfiguration and the optimum size and location of capacitor in the distribution system. Figure 4 illustrates the flow chart for the proposed Methodology to reconfiguration and optimal placement of Capacitors in the distribution system through applying Genetic and analytical methods. In this flowchart, the hatched block denotes

capacitor allocation algorithms described in section 4. Also "Calculate loop number" block denotes section 2 algorithm to find independent loops and the "graph theory" block refers to section 3.

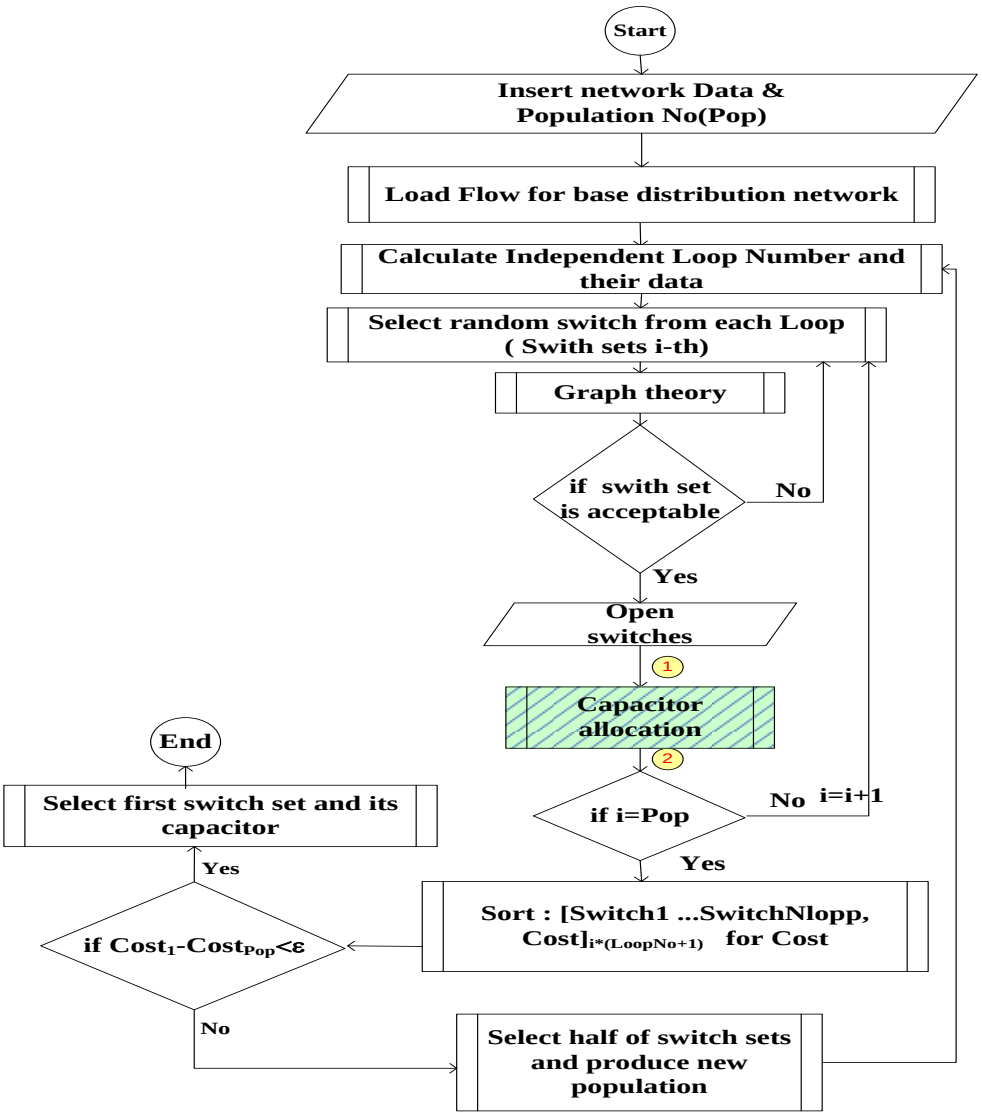

Figure 4. Flowchart of proposed methodology

Results and discussion

In this section, the results obtained with the proposed methodology are presented. The 33-bus system, 12.66 kV and 10MW is used and the substation voltage is considered as 1.0 p.u. The proposed algorithm is used to identify Independent loops of network. Table 2 shows comparison of loops in Figure 3 to identify independent loops. Figures 5(a) to 5(e) show the independent loops (Loop_M1, Loop_M2, Loop_M3 and Loop_M4).

Table 2. Independent loops of IEEE 33-Bus test distribution network.

i-th loop of Figure 3	LNoi	j-th loop of Figure 3	LNoj	LM	LDi= LNoi-LM	LDj= LNoj-LM	LNoi>(LDi+LDj)	LNoj>(LDi+LDj)	If (LNoi-(LDi+LDj)) >(LNoj >(LDi +LDj))	If (LNoi-(LDi+LDj)) < (LNoj>(LDi+ LDj))	Independent loops (Figure 4(a) to Figure 4(e))
Loop1	10	Loop2	15	9	1	6	√	√	-	√	Loop_M1, Loop_M2 from step 4.1
		Loop3	7	0	10	7	-	-			
		Loop4	21	2	8	19	-	-			
		Loop5	11	3	7	8	-	-			
Loop2	15	Loop1	10	9	6	1	√	√	√	-	Loop_M1, Loop_M2 from step 4.1
		Loop3	7	3	12	4	-	-			
		Loop4	21	6	9	15	-	-			
		Loop5	11	3	12	8	-	-			
Loop3	7	Loop1	10	0	7	10	-	-			
		Loop2	15	3	4	12	-	-			
		Loop4	21	6	1	15	-	√	-	√	Loop_M3, Loop_M4 from step 4.1
		Loop5	11	0	7	11	-	-			
Loop4	21	Loop1	10	2	19	8	-	-			
		Loop2	15	6	15	9	-	-			
		Loop3	7	6	15	1	√	-	√	-	Loop_M3, Loop_M4 from step 4.1
		Loop5	11	4	17	7	-	-			
Loop5	11	Loop1	10	3	8	7	-	-			Loop5 from step 4.2
		Loop2	15	3	8	12	-	-			
		Loop3	7	0	11	7	-	-			
		Loop4	21	4	7	17	-	-			

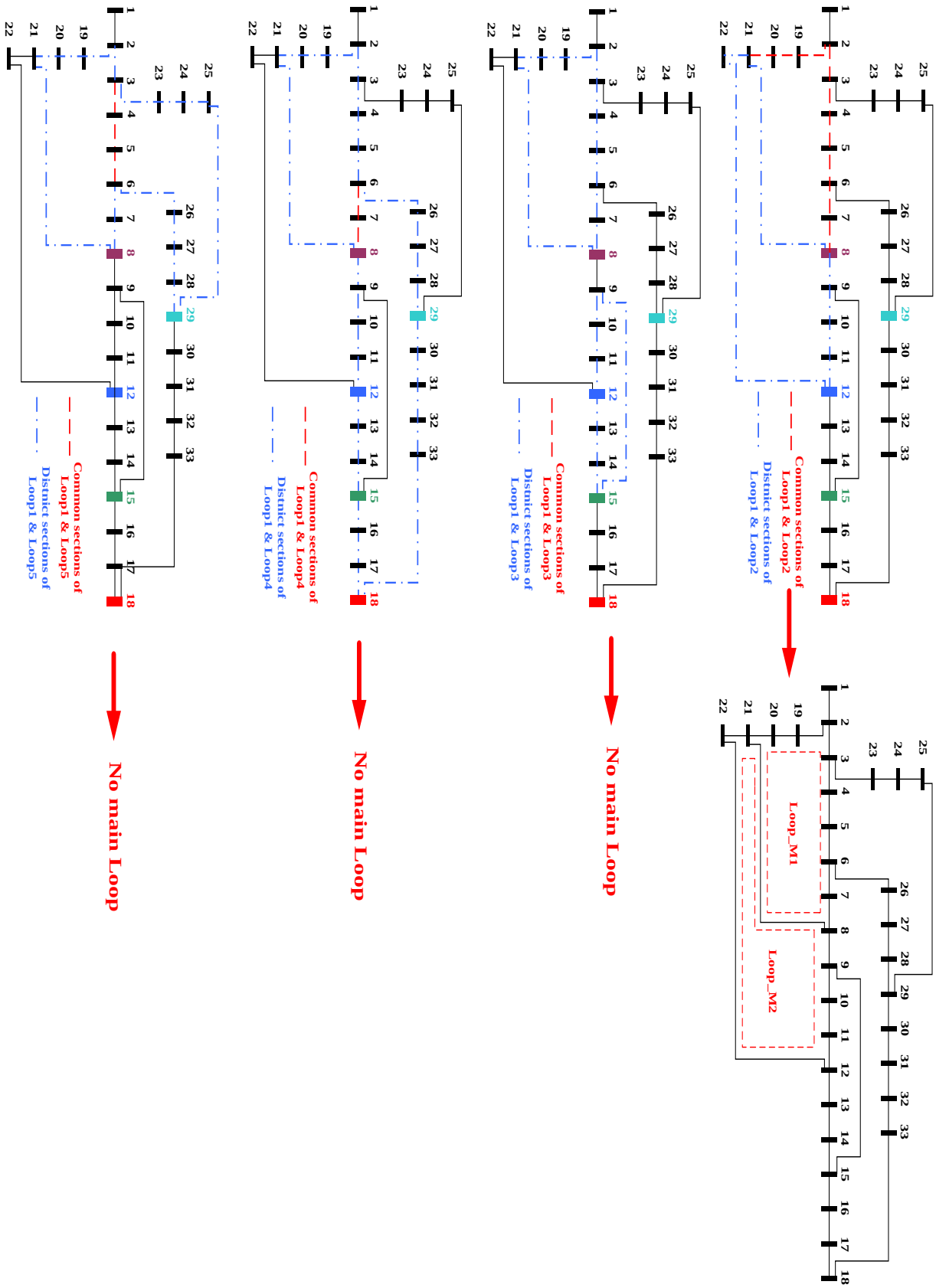

Figure 5(a). Common & distinct sections of Loop1 and Loops 2, 3, 4, 5 in IEEE 33-Bus test distribution network to identify main loops

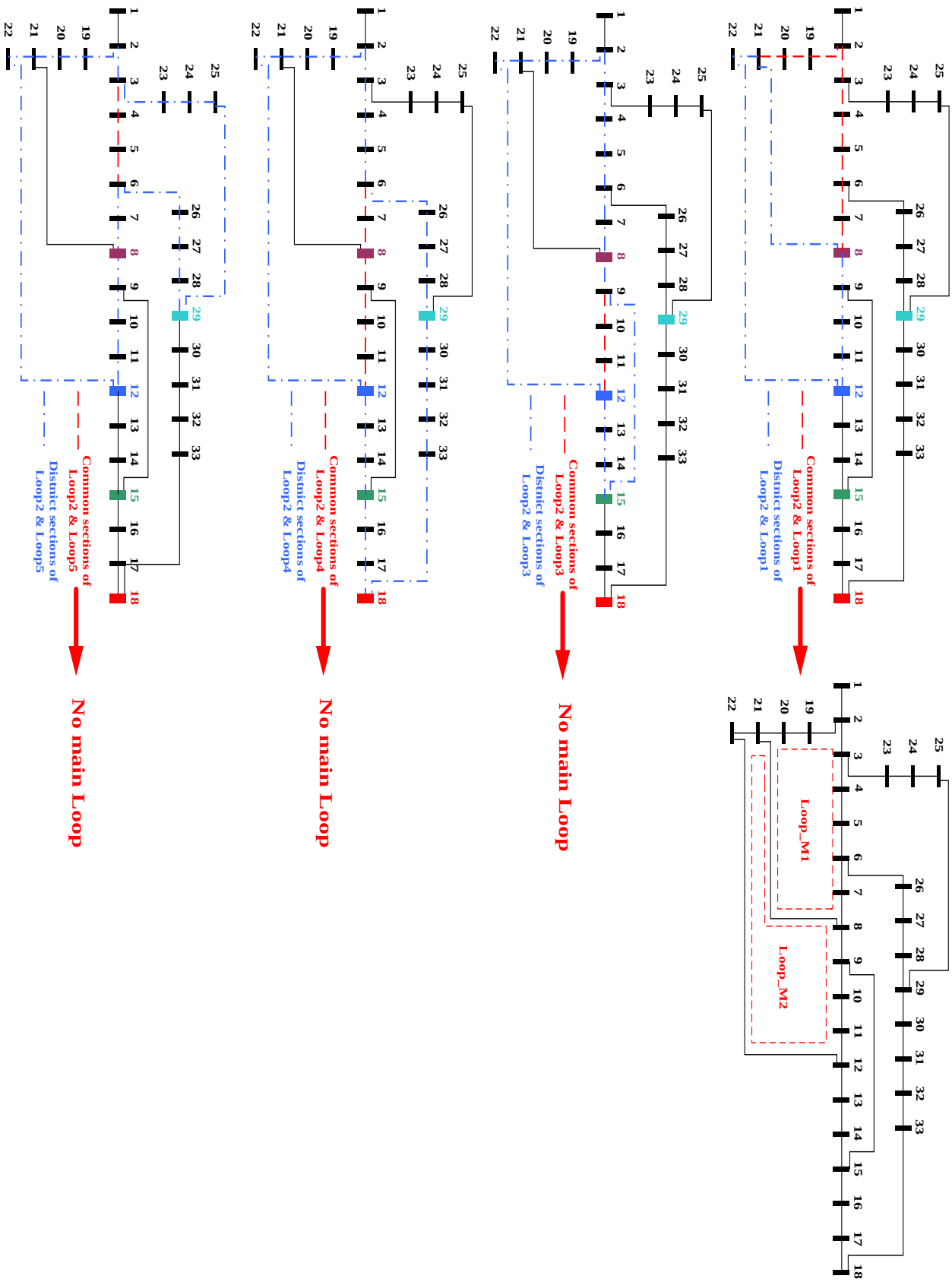

Figure 5(b). Common & distinct sections of Loop2 and Loops 1, 3, 4, 5 in IEEE 33-Bus test distribution network to identify main loops

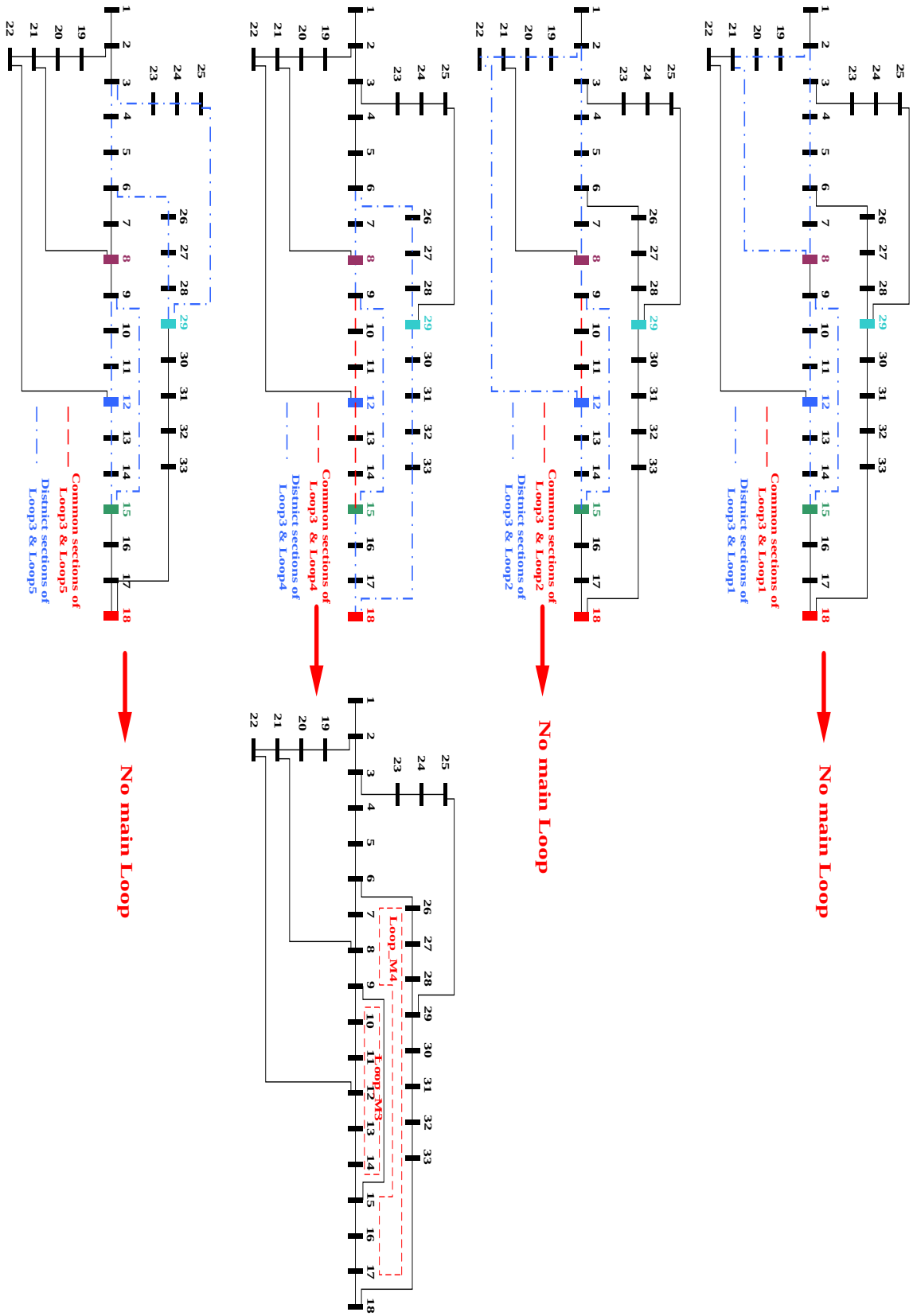

Figure 5(c). Common & distinct sections of Loop3 and Loops 1, 2, 4, 5 in IEEE 33-Bus test distribution network to identify main loops

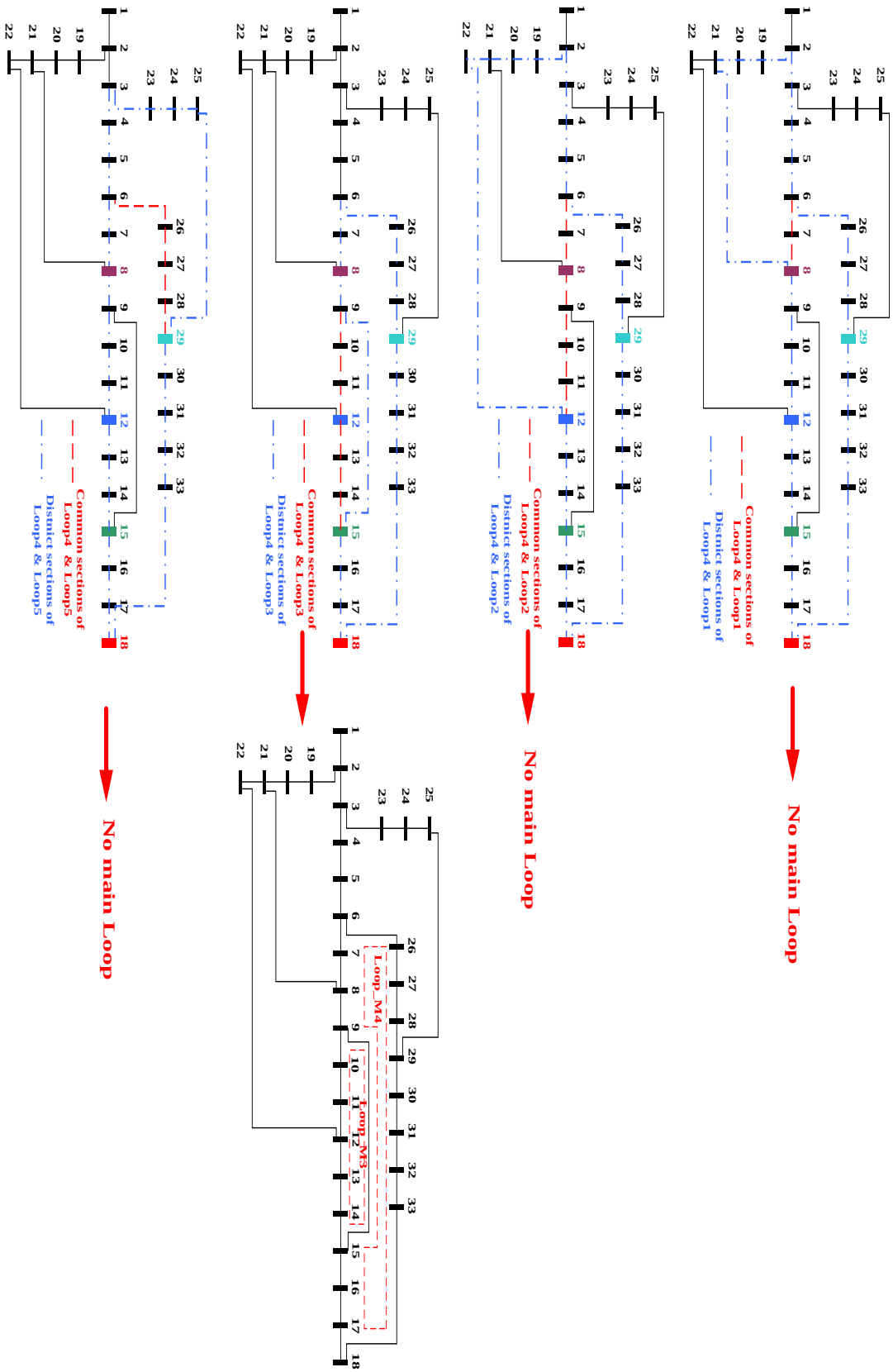

Figure 5(d). Common & distinct sections of Loop4 and Loops 1, 2, 3, 5 in IEEE 33-Bus test distribution network to identify main loops

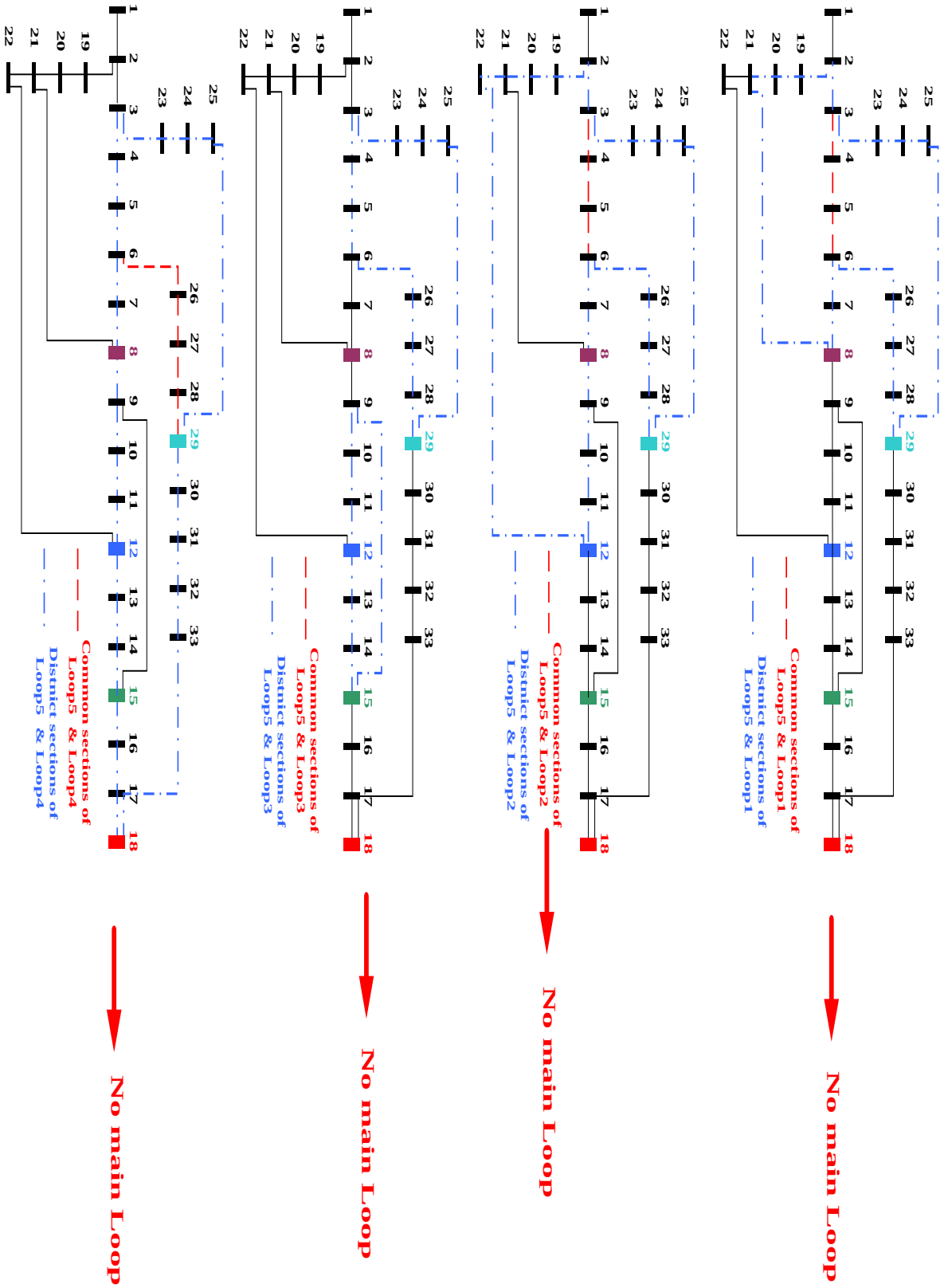

Figure 5(e). Common & distinct sections of Loop5 and Loops 1, 2, 3, 4 in IEEE 33-Bus test distribution network to identify main loops

From Table 2 and Figures 5 (a) to (e), independent loops of IEEE 33-Bus test distribution network is shown in Fig (6).

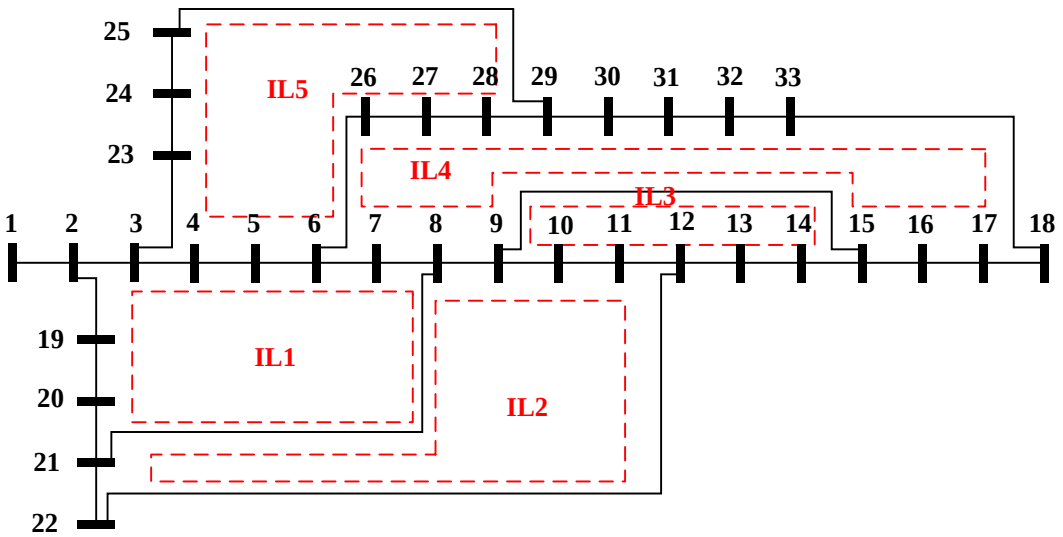

Figure 6. Independent Loops of IEEE 33-Bus test distribution network

As presented in Table 3, in this initial topology, the open branches are 33, 34, 34, 36 and 37 and the total active power loss and voltage sensitivity are 211 kW and 0.0517 respectively.

Table 3. Main network results

Open Switches	Loss (kw)	Voltage sensitivity
33-34-35-36-37	211	0.0517

In this study, both feeder reconfiguration and setting of switched capacitors are considered together. We had investigated four cases for this application example. These four cases are as follows (figures 7-10):

Case 1. Comparison of both feeder reconfiguration with one capacitor addition and feeder reconfiguration simultaneously, is considered.

Case 2. Comparison of both feeder reconfiguration with two capacitor addition and feeder reconfiguration simultaneously, is considered.

Case 3. Comparison of both feeder reconfiguration with three capacitor addition and feeder reconfiguration simultaneously, is considered.

Case 4. Comparison of both feeder reconfiguration with four capacitor addition and feeder reconfiguration simultaneously, is considered.

As shown in table 4, for W_1=0.5, the cost of all cases for only reconfiguration (without capacitor allocation) or reconfiguration with capacitor allocation are equal approximately. Comparison of only reconfiguration (without capacitor allocation) and reconfiguration with capacitor allocation for each case, shows that capacitor allocation with reconfiguration cause near 15% reduction of cost.

Table 4. Reconfiguration and capacitor allocation results

Case No	Reconfiguration (without capacitor allocation)					Reconfiguration and capacitor allocation												
	Open Switches	Loss (kw)	Loss sensitivity	Voltage sensitivity	Cost	Open Switches	Loss (kw)	Loss sensitivity	Voltage sensitivity	Cost	1st Capacitor location	1st Capacitor size (KVAR)	2nd Capacitor location	2nd Capacitor size (KVAR)	3th Capacitor location	3th Capacitor size (KVAR)	4th Capacitor location	4th Capacitor size (KVAR)
1	7-10-13-31-28	113	0.53	0.03	0.56	7-10-13-29-24	88	0.41	0.027	0.47	33	462	-	-	-	-	-	-
2	6-9-13-31-33	114	0.54	0.02	0.56	7-21-13-32-28	90	0.42	0.024	0.44	9	447	30	1187	-	-	-	-
3	7-9-14-31-24	114	0.52	0.031	0.56	6-9-12-31-28	85	0.4	0.022	0.42	8	693	30	1077	33	111	-	-
4	7-9-14-31-24	111	0.56	0.031	0.52	7-10-13-31-26	84	0.4	0.022	0.41	4	381	8	539	30	1158	33	93

Figures 7 to 10 shows simulation results of all four cases. Number of iteration for all cases is 40.

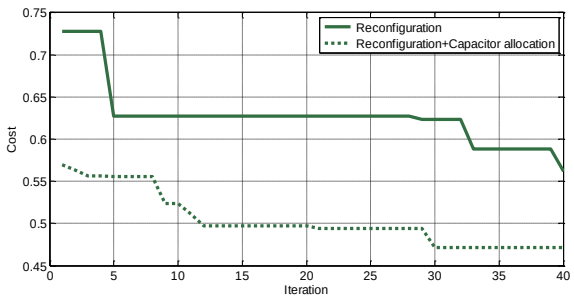

(7-a): Cost

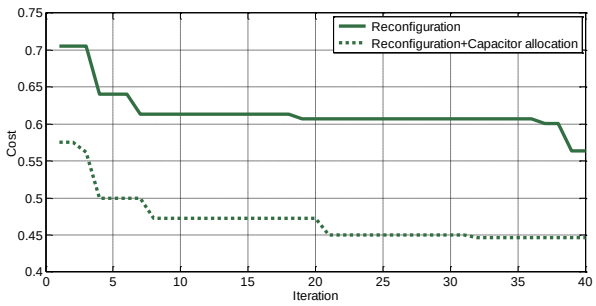

(8-a): Cost

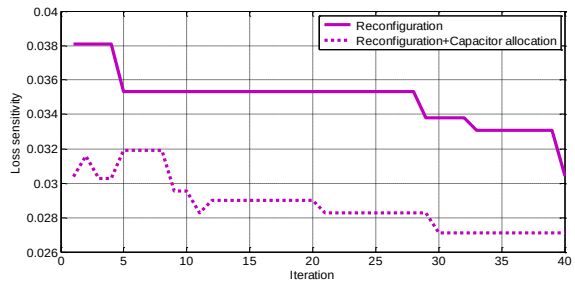

(7-b): Loss sensitivity

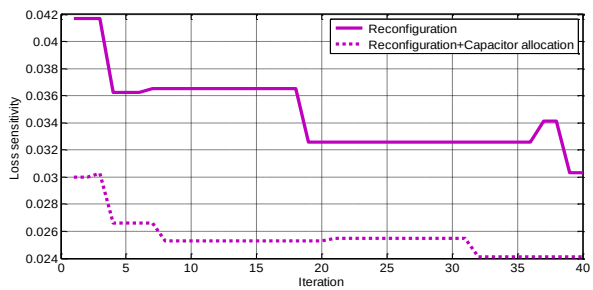

(8-b): Loss sensitivity

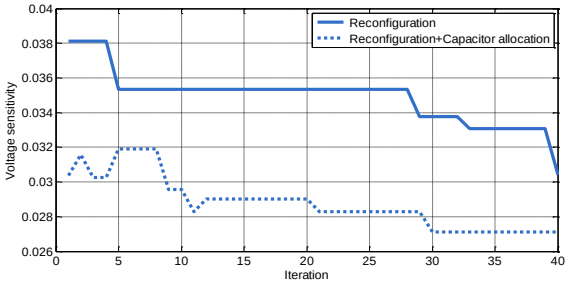

(7-c): Voltage sensitivity

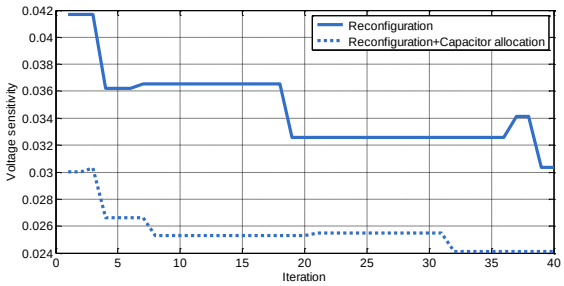

(8-c): Voltage sensitivity

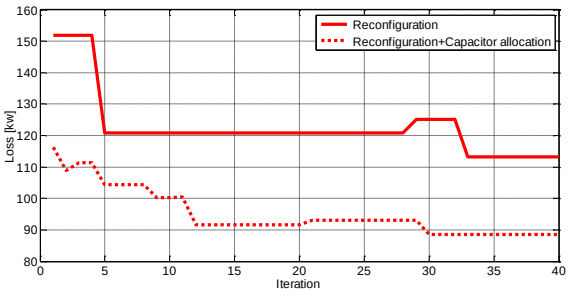

(7-d): Loss (kw)

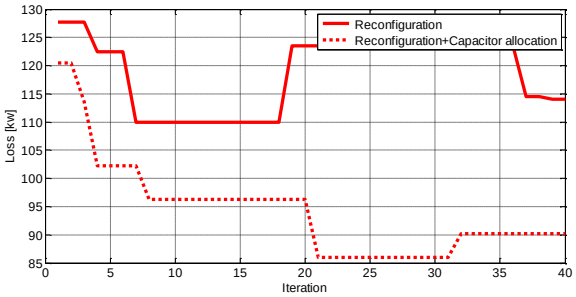

(8-d): Loss (kw)

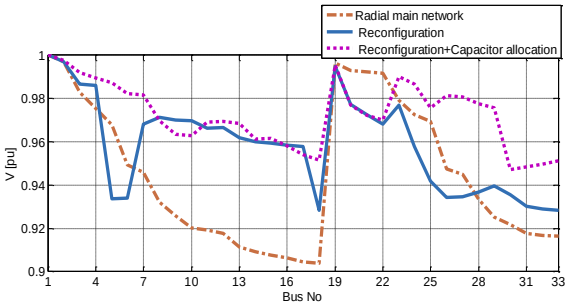

(7-e): Voltage

Figure 7. Reconfiguration (without capacitor allocation) and Reconfiguration with one capacitor allocation-Case 1

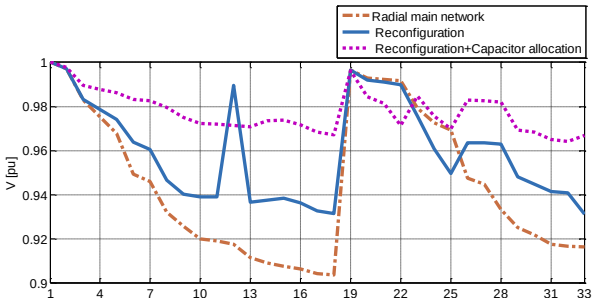

(8-e): Voltage

Figure 8. Reconfiguration (without capacitor allocation) and Reconfiguration with two capacitor allocation-Case 2

Figure 7 shows only reconfiguration without capacitor allocation and also reconfiguration with one capacitor allocation in IEEE 33-Bus test distribution network (Case 1). Figure 8 shows only reconfiguration without capacitor allocation and Reconfiguration with two capacitor allocations (Case 2).

Figure 9 shows only reconfiguration without capacitor allocation and also reconfiguration with three capacitor allocations (Case 3). Figure 10 shows reconfiguration without capacitor allocation and also reconfiguration with four capacitor allocations (Case 4). Considering both feeder reconfiguration and setting of more switched capacitor simultaneously can generate more losses reduction than considering them lonely or separately (approximately 15%). In addition to power-loss reduction, the voltage profile can be

improved as well by the proposed method and with a proper weight, loss reduction and voltage improvement is achieved in this study.

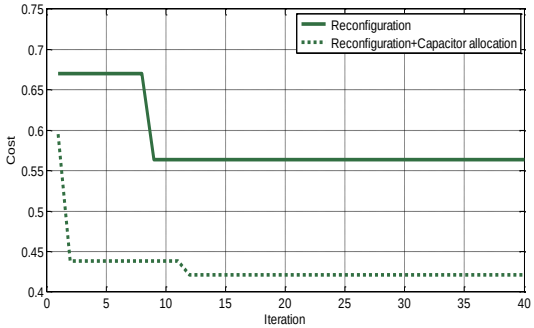

(9-a): Cost

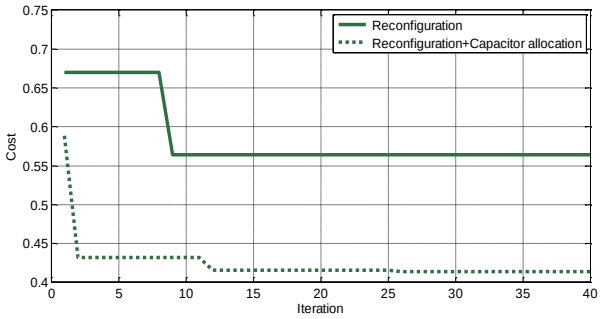

(10-a): Cost

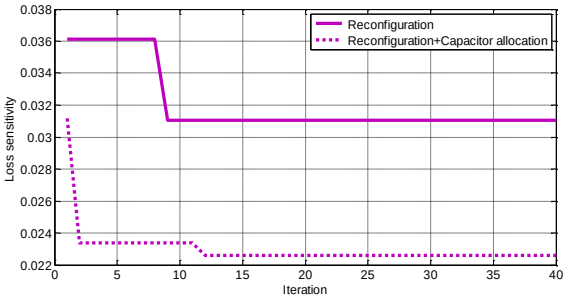

(9-b): Loss sensitivity

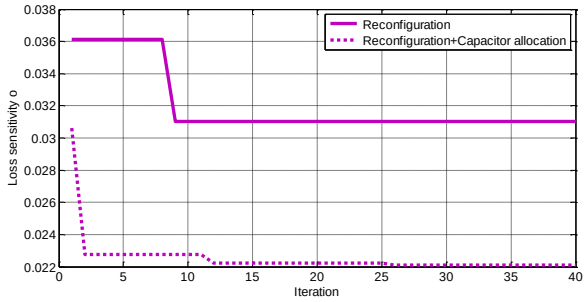

(10-b): Loss sensitivity

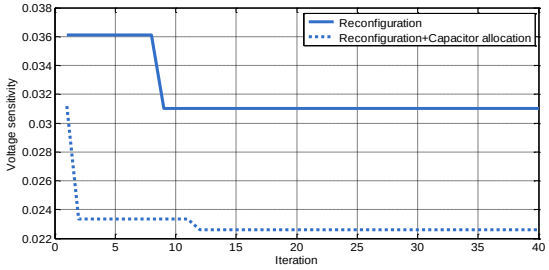

(9-c): Voltage sensitivity

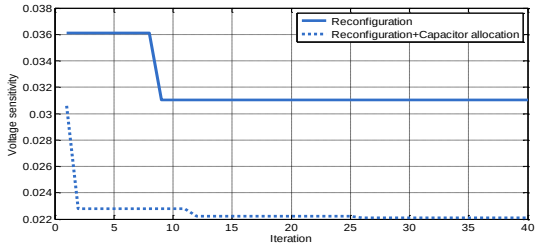

(10-c): Voltage sensitivity

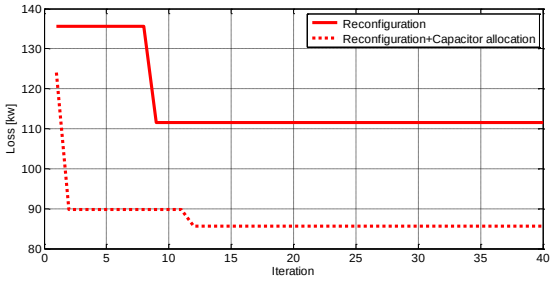

(9-d): Loss (kw)

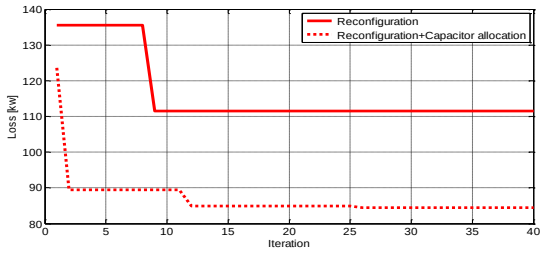

(10-d): Loss (kw)

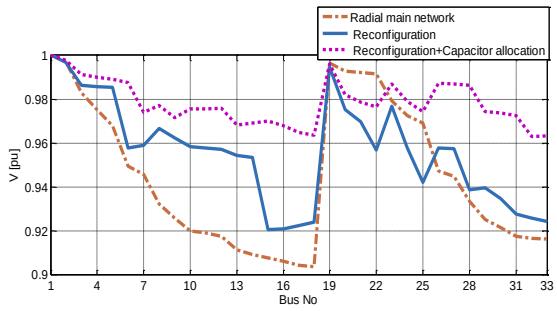

(9-e): Voltage

Figure 9. Reconfiguration (without capacitor allocation) and Reconfiguration with three capacitor allocation-Case3

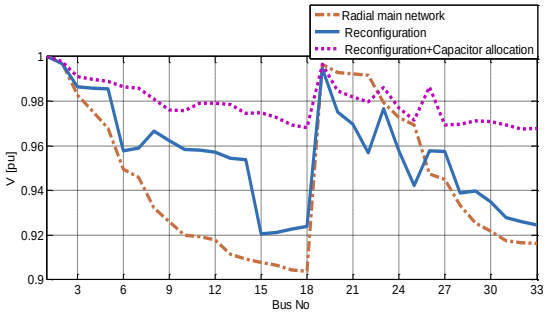

(10-e): Voltage

Figure 10. Reconfiguration (without capacitor allocation) and Reconfiguration with four capacitor allocation-Case4

Conclusion

Feeder reconfiguration and capacitor placement approach employing new method of independent loop identification is used to minimize energy losses and improving network voltage on radial electrical networks. From the studies, several important observations can be concluded. New algorithm to independent loop identification is used for large networks and GA is used for reconfiguration. Analytical method is applied for capacitor allocation and the power losses of distribution systems can be effectively reduced by proper feeder reconfiguration and capacitor addition. Considering both feeder reconfiguration and setting of switched capacitors simultaneously can generate more losses reduction than considering them lonely or separately (approximately 15%). In addition to power-loss reduction, the voltage profile can be improved as well by the proposed method and with a proper weight, loss reduction and voltage improvement is achieved in this study. The proposed methodology was tested and validated in 33-bus IEEE distribution test system.

References

1. Merlin A, Back H., *Search for a minimal loss operating spanning tree configuration for an urban power distribution system*, in: Proc of the power systems computation conf (PSCC), 1975, p. 1–18.
2. Castro Jr. Carlos A., Watanabe Andre A., *An efficient reconfiguration algorithm for loss reduction of distribution systems*, Electric Power Systems Research, 1990, 19 (2), p. 137-144.

3. Hijazi H., Thiébaux S., Optimal distribution systems reconfiguration for radial and meshed grids, International Journal of Electrical Power & Energy Systems, 2015, 72, p. 136-143.
4. Naveen S., Sathish Kumar K., Rajalakshmi K., Distribution system reconfiguration for loss minimization using modified bacterial foraging optimization algorithm, International Journal of Electrical Power & Energy Systems, 2015, 69, p. 90-97.
5. Dong-Li D., Xiao-Dong L., Xiao-Yue W., Bin Z., Reconfiguration of distribution network for loss reduction and reliability improvement based on an enhanced genetic algorithm, International Journal of Electrical Power & Energy Systems, 2015, 64, p. 88-95.
6. Duque Felipe G., Leonardo W. de Oliveira, Edimar J. de Oliveira, André L.M. Marcato, Ivo C. Silva Jr., Allocation of capacitor banks in distribution systems through a modified monkey search optimization technique, International Journal of Electrical Power & Energy Systems, 2015, 73, p. 420-432.
7. Gholami R., Shahabi M., Haghifam M.R., An efficient optimal capacitor allocation in DG embedded distribution networks with islanding operation capability of micro-grid using a new genetic based algorithm, International Journal of Electrical Power & Energy Systems, 2015, 71, p. 335-343.
8. Kanwar N., Gupta N., Niazi K.R., Swarnkar A., Improved meta-heuristic techniques for simultaneous capacitor and DG allocation in radial distribution networks, International Journal of Electrical Power & Energy Systems, 2015, 73, p. 653-664.
9. Naresh A., Pukar M., Mithulananthan N., *An analytical approach for DG allocation in primary distribution network*, International Journal of Electrical Power & Energy Systems, 2006, 28 (10), p. 669-678.
10. Rajkumar V., Khatod D.K., *An analytical approach for sizing and siting of DGs in balanced radial distribution networks for loss minimization*, International Journal of Electrical Power & Energy Systems, 2015, 67, p. 191-201.
11. Hung D.Q., Mithulananthan N., Bansal R.C., *Analytical strategies for renewable distributed generation integration considering energy loss minimization*, Applied Energy, 2013, 105, p. 75-85.
12. Su C.T., Lee C.S., *Feeder reconfiguration and capacitor setting for loss reduction of distribution systems*, Electric Power Systems Research, 2001, 58 (2), p. 97-102.

13. de Oliveira L.W, Carneiro S.Jr., de Oliveira E.J., Pereira J.L.R., Silva I.C.Jr., Costa J.S., *Optimal reconfiguration and capacitor allocation in radial distribution systems for energy losses minimization*, International Journal of Electrical Power & Energy Systems, 2010, 32 (8), p. 840-848.
14. Hamid R.E., Fadaeinedjad R., *Distribution system efficiency improvement using network reconfiguration and capacitor allocation*, International Journal of Electrical Power & Energy Systems, 2015, 64, p. 457-468.