Leonardo Electronic Journal of Practices and Technologies
ISSN 1583-1078
Issue 31, July-December 2017
p. 235-250

Engineering, Environment

A firefly algorithm approach for determining the parameters characteristics of solar cell

Mohamed LOUZAZNI[1*], Ahmed KHOUYA[1] and Khalid AMECHNOUE[1]

[1] *Mathematics, Informatic & Applications Team, National School of Applied Sciences, Abdelmalek Essaadi University, Tanger, Morocco*
E-mail(s): louzazni@msn.com, ahmedkhouya3@yahoo.com, kamechnoue@gmail.com[3]
[*] Corresponding author, phone: 00212613881279

Received: October 23, 2017 / Accepted: December 02, 2017 / Published: December 30, 2017

Abstract

A metaheuristic algorithm is proposed to describe the characteristics of solar cell. The I-V characteristics of solar cell present double nonlinearity in the presence of exponential and in the five parameters. Since, these parameters are unknown, it is important to predict these parameters for accurate modelling of I-V and P-V curves of solar cell. Moreover, firefly algorithm has attracted the intention to optimize the non-linear and complex systems, based on the flashing patterns and behaviour of firefly's swarm. Besides, the proposed constrained objective function is derived from the current-voltage curve. Using the experimental current and voltage of commercial RTC France Company mono-crystalline silicon solar cell single diode at 33°C and 1000W/m² to predict the unknown parameters. The statistical errors are calculated to verify the accuracy of the results. The obtained results are compared with experimental data and other reported meta-heuristic optimization algorithms. In the end, the theoretical results confirm the validity and reliability of firefly algorithm in estimation the optimal parameters of the solar cell.

Keywords

Metaheuristic algorithm; Solar cell; Complex systems; Firefly algorithm; Statistical errors

Introduction

The output current-voltage and power-voltage characteristics curves are usually studied using an electrical equivalent circuit model. This electrical equivalent circuit consists of current source with one or two diodes connected in parallel, quality factor of diode, and series and shunt resistors, to consider energy losses in this model [1]. The accuracy of solar cell models greatly depends on their model parameters [2]. However, the model parameters usually are not directly available from manufacturers and they change due to aging and faults. Recently, there are a few mathematical models have been proposed to describe the current-voltage relationship, and many studies are focused on the modelling of solar cell and developing several electric models with different level of complexity [3][4]. The characteristics curves of solar cell present double nonlinearity on exponential and on the parameters. Therefore, it is important to extract the model parameters based on experimental current-voltage curve of commercial RTC France Company mono-crystalline silicon solar cell single diode at 33°C and 1000W/m².

The solar cell parameters extraction can be generally categorized into three categories: analytical methods [5] [6] [7], numerical methods [8] [9] [10] and hybrid methods [11] [12]. The analytical and hybrid methods usually formulate some explicit equations and directly calculated the parameters using the given parameters by manufacturer, or based in open circuit, short circuit, maximum power points current and voltage. Moreover, the analytical and hybrid methods require continuity, convexity and differentiability conditions for being applicable. Although they feature simplicity, approximation and fast calculation, the parameters are derived only by few key points and therefore the accuracy is susceptible to measurement noise. Recently, to overcome the drawback the problem of continuity and derivability of analytical methods. A various deterministic and stochastic numerical methods have been proposed to improve the performance of parameters extraction. The aims are to minimize the error between the experimental data points and theoretical current-voltage curves. The deterministic methods or meta-heuristics algorithms include improved chaotic whale optimization algorithm [8], Shuffled Complex Evolution [9], biogeography-based optimization algorithm [10], artificial bee swarm optimization algorithm [13] and so on. Although these methods usually are quite efficient and powerful in local search, they are prone to be trapped in local minima.

In recent years, the bio-inspired meta-heuristic optimization algorithm such as firefly algorithm, has been attracted much attention on solving modern global optimization for nonlinear and complex system [14]. The meta-heuristic algorithms are suitable choices for solving this problem, due to their global search power as well as derivative-free advantage. The firefly algorithm is developed by Yang [15], is a nature inspired stochastic optimization algorithm. Although it is among the most powerful algorithm in solving modern global optimization for nonlinear and complex system. The firefly algorithm has become an important technique that has been applied in almost all areas of optimization, as well as in engineering practice [16]. The algorithm inspired by the flashing lights of fireflies in nature, and uses a kind of randomization by searching for set solutions.

In this paper, a single diode model which depends on the solar irradiance, the temperature and five characteristics parameters is established. The proposed solar cell is a 57-mm diameter commercial (R.T.C France Company) silicon solar cell [17]. The single diode model can describe behaviour of *I-V* curve adequately, and limited parameterization difficulty and widely adopted to represent the performance of solar cell. A bioinspired algorithm is developed to solve the nonlinearity behavioural to extract the five parameters of solar cell. The goal is to minimize the objective function adapted to minimize the absolute errors between the experimental and calculated current-voltage data. The objective function is formulated from *I-V* curve under constrains of the five parameters. To verify the performance of the proposed approach and the quality of the obtained results, the statistical analyses are carried out to measure the accuracy of the calculated parameters and model suitability. The five extracted parameters are putted in the *I-V* curve equation, to reconstruct the *I-V* and *P-V* characteristics curves and compared to the experimental points. For more validity, the obtained results are compared with recent techniques such as biogeography-based optimization algorithm with mutation strategies (BBO-M), Levenberg-Marquardt Algorithm combined with Simulated Annealing (LMSA), Artificial Bee Swarm Optimization algorithm (ABSO), Artificial Bee Colony optimization (ABC) and Nelder-Mead and Modified Particle Swarm Optimization (NM-MPSO). The obtained results are in accordance with the experimental data, there is good agreement for most of the extracted parameters and the proposed algorithm outperformed the compared techniques. Finally, the theoretical results confirm the validity and reliability of firefly algorithm in extraction of solar cell parameters.

Material and method

Solar cell model

The electrical behaviour of solar cell is modelled by its outputs current-voltage characteristic curve represent the ability and keys to analysis the solar cell performance [1]. A typical solar cell single diode model is shown in figure 1 with series and shunt resistance [2].

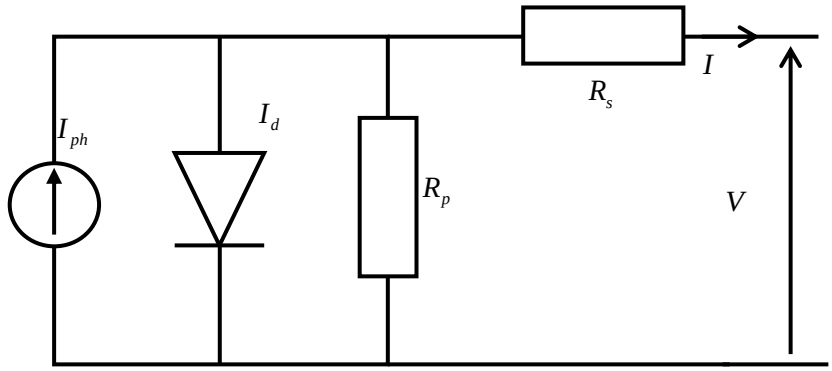

Figure 1. The single diode model of solar cell.

The generated current-voltage curve according to the electrical intrinsic parameters can be represented by Eq. (1):

$$I = I_{ph} - I_{rs}\left[\exp\left(\frac{V + I.R_s}{aV_{th}}\right) - 1\right] - \frac{V + I.R_s}{R_P} \quad (1)$$

Where: I_{ph} - is the photocurrent, I_{rs} - is the reverse saturation current of diode, a - is the quality factor of the diode, R_s- is the series resistance, and R_p - is the parallel resistance. The V_{th}- is the thermal voltage, I and V- are the current and voltage of solar cell respectively.

The photocurrent I_{ph} - is highly depends and directly proportional to solar irradiance and temperature which is described as Eq. (2):

$$I_{ph} = \left[I_{sc-ref} + K_i\left(T_C - T_{ref}\right)\right]\frac{G}{G_{ref}} \quad (2)$$

Where, $I_{sc\text{-}ref}$ - is the short circuit current at reference conditions, T_c and T_{ref} -are the actual and reference temperature of solar cell, respectively. The G and G_{ref} - are the actual and reference solar irradiation, respectively, K_i -is the cell's short circuit current temperature coefficient.

The diode saturation current is formulating as follows, Eq. (3):

$$I_s = I_{rs}\left(\frac{T_c}{T_{ref}}\right)^3 \exp\left(\frac{E_{g,ref}}{KT_{ref}} - \frac{E_g}{KT_c}\right) \quad (3)$$

Where $E_{g,ref}$ - is the band gap energy at standard test condition (STC). The solar cell temperature and band gap are given in Index.

Parameter identification and objective function

To identify the five parameters of solar cell, we need to identify the best model of equation (1). The constrained objective function is derived from *I-V* curves and using the experimental points [17], to minimize the squared error between experimental and theoretical points. In the optimization algorithm, a vector defines each solution $x=[I_{ph}\ I_0\ a\ R_s\ R_p]$ during the optimization process; the objective function must be minimized with respect to the limits of parameters x.

The equation (1) is rewriting in the following homogeneous Eq. (4).

$$f(V,I,x) = I - I_{ph} + I_{rs}\left[\exp(\frac{V + I.R_s}{aV_{th}}) - 1\right] + \frac{V + I.R_s}{R_P} = 0 \quad (4)$$

The constrained objective function used the absolute error, to minimize the summation of individual absolute error (IAE).

Moreover, the objective function is the sums of IAEs for any given set of measurements, it is rewriting in following homogeneous Eq. (5):

$$f(V,I,x) = \sum_{i=1}^{26}\left(f_i(V_i, I_i, x)\right) = 0 \quad (5)$$

Where: V_i and I_i are the ith measured current and voltage in 26 data points, respectively.

The objective function must minimize following Eq. (6):

$$\begin{aligned} &Minimize\ f(V,I,x) \\ &subject\ to\ g_j(x_i) \le 0 \\ &where,\ i,j = 0,1,2..,5 \end{aligned} \quad (6)$$

Under the limit of the variable, Eq. (7):

$$\begin{aligned} &0 \le g(x_1) \le 1 \\ &0 \le g(x_2) \le 1 \\ &1 \le g(x_3) \le 2 \\ &0 \le g(x_4) \le 0.5 \\ &0 \le g(x_5) \le 100 \end{aligned} \tag{7}$$

During the optimization, the objective function is minimized with respect to the parameter range, according to the literature survey, the bounds of the solar cell model's parameters are shown in Table 1.

Table 1. Bounds of the solar cell model parameters.

Parameter	I_{pk}	I_S	a	R_S	R_P
Lower	0	0	1	0	0
Upper	1	1	2	0.5	100

To verify the quality of the extracted parameters, we calculus the following statically errors Individual Absolute Error (IAE), Relative Error (RE), Residual Sum of Squares (SSE), Root Mean Square Error (RMSE), median absolute error (MAE), for each measurement by the following equations and compared with recent techniques, Eq. (8-12).

$$IAE = \left| I_{\text{measured}} - I_{\text{estimated}} \right| \tag{8}$$

$$RE = \frac{I_{\text{measured}} - I_{\text{estimated}}}{I_{\text{measured}}} \tag{9}$$

$$MAE = \sum_{i=1}^{m} \frac{\left| I_{\text{estimated}} - I_{\text{measured}} \right|}{m} \tag{10}$$

$$SSE = \sum_{i=1}^{m} \left(I_{\text{measured}} - I_{\text{estimated}} \right)^2 \tag{11}$$

$$RMSE = \sqrt{\frac{1}{m} \sum_{i=1}^{m} \left(I_{\text{measured}} - I_{\text{estimated}} \right)^2} \tag{12}$$

Firefly algorithm

The firefly algorithm is a bio-inspired scholastic algorithm for optimization nonlinear and complex system. It was introduced in 2009 at Cambridge University by Yang [15].

The algorithm is inspired by the flashing behaviour of fireflies at night. Therefore, the algorithm based on three idealized rules:

(1) All fireflies are unisex which means that they are attracted to other fireflies regardless of their sex.

(2) The degree of the attractiveness of a firefly is proportion to its brightness, thus for any two flashing fireflies, the less bright one will move towards the brighter one and the more brightness means the less distance between two fireflies.

(3) The brightness of a firefly is determined by the value of the objective function [15].

Attractiveness

The light intensity *I* represent the solutions, and proportional to the square of the observe distance *r* [14]. The light intensity of each firefly is proportional to the quality of the solution. Each firefly observes decreased light intensity, then the one fireflies emit, due to the air absorption over the distance (*d*). Light intensity reduction abides the law, Eq. (13):

$$I(r,d) = \frac{I_0}{r^2} \tag{13}$$

Where: I_0 - is the light intensity at $r=0$ (zero distances).

The attenuation through the air absorption coefficient is described in the following Eq. (14):

$$I(r,\lambda,d) = I_0 e^{-\lambda r} \tag{14}$$

The attractiveness function can be approximated from the both the Eq. (15):

$$I(r) = I_0 e^{-\lambda r^2} \tag{15}$$

Where: $I(r)$ - is the intensity at distance r; I_r - is the intensity at the source point; λ - is the absorption coefficient.

Distance and movement

We suppose a firefly is located at $x_i = (x_{i,1}, x_{i2}, \ldots, x_{i,k})$ is brighter than another firefly located at $x_j=(x_{j,1},x_{j2}\ldots x_{j,k})$, the firefly located at x_i will move towards x_j.

The distance function between any two fireflies *i* and *j* at x_i and x_j positions is the Euclidean distance given by as follows Eq. (16):

$$r_{ij} = \left| x_i - x_j \right| = \sqrt{\sum_{k}^{d} \left(x_{i,k} - x_{j,k} \right)^2} \tag{16}$$

Where: $x_{i,k}$ - is the kth component of the spatial coordinate of x_i firefly.

The movement of a firefly *i* is attracted to another more attractive firefly *j* and the update location is determined by Eq. (17):

$$x_{i+1} = x_i + \beta_0 e^{-\lambda r_{ij}^2} \left(x_j - x_i \right) + \alpha \left(rand - \frac{1}{2} \right) \tag{17}$$

Where: α - is the coefficient of randomization parameter determined by the problem of interest, while rand is a random-number generator uniformly distributed in the space *(0, 1)*; $\beta_0=0.1$, 0<α<1 and the attractiveness or absorption coefficient $\lambda=1$, which guarantees a quick convergence of algorithm to the optimal solution.

The location of each firefly is characterised by three terms as written in equation (18, the first term presents the current position of a firefly, the second term is used for considering a firefly's attractiveness to light intensity seen by adjacent fireflies and the third term is used for the random movement of a firefly in case there are not any brighter ones.

The algorithm can be summarized as follows.

(1) Generate a random solution set x = (x1, x2, …, xn).

(2) Compute intensity for each solution member I = (I1, I2, …, In).

(3) Move each firefly towards other brighter fireflies, and if there is no other brighter firefly, move it randomly.

(4) Update the solution set.

(5) Terminate if a termination criterion is fulfilled otherwise go back to step 2.

Schematically, the Firefly algorithm can be summarized as a pseudo code presented in Index.

The flow chart of the parameter extraction process by using firefly algorithm is shown in Figure 2.

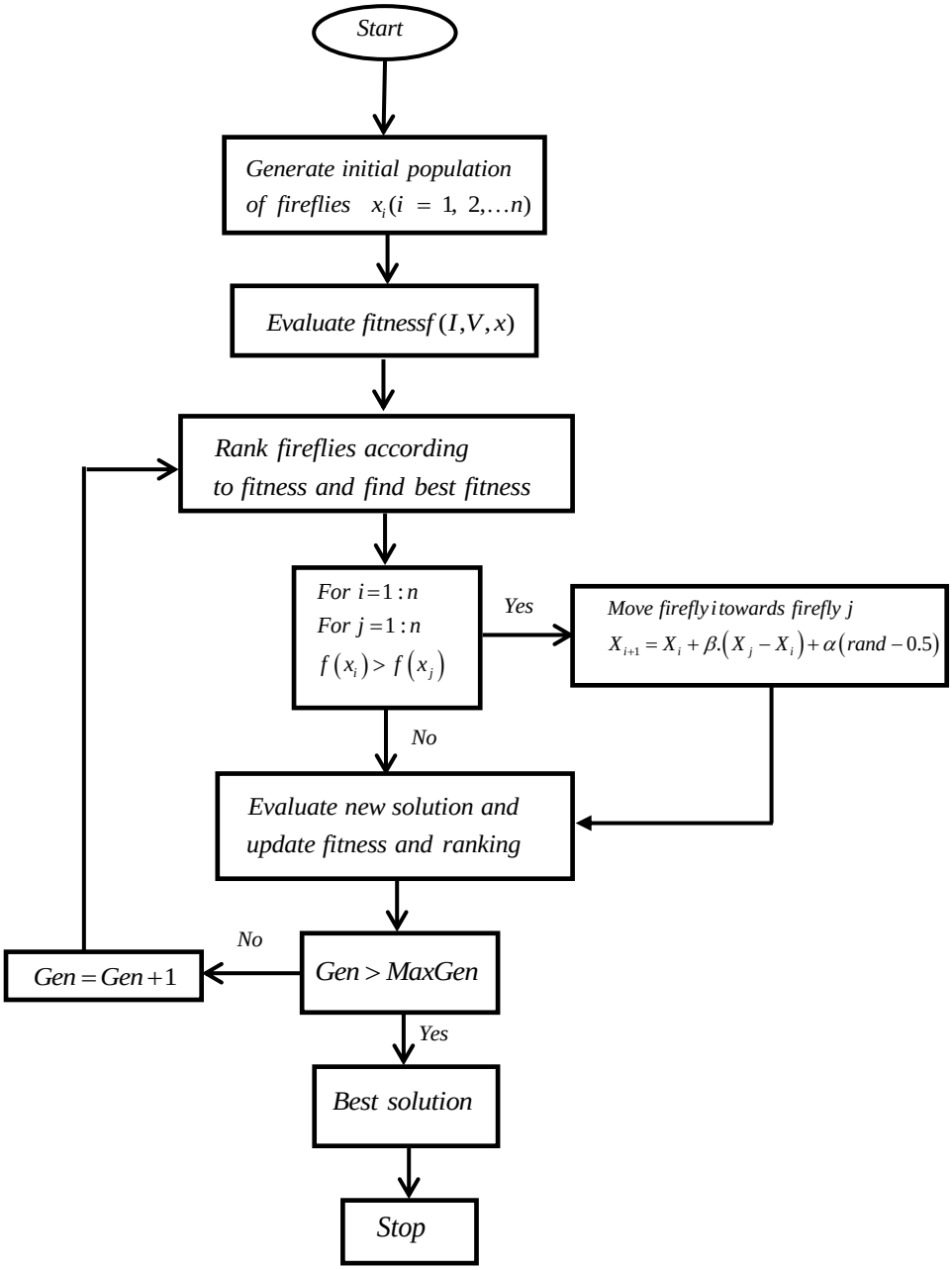

Figure 2. Flow chart of firefly algorithm

Results and discussions

The scholastic meta-heuristic firefly algorithm is proposed to identify the five parameters of solar cell. The irradiation and temperature are fixed, and the current-voltage curve is measured with 26 points. The experimental points are obtained from [17], which a 57-mm diameter commercial (R.T.C France) silicon solar cell at 33°C.

The identified optimal parameters values have been reported in Table 2, and compared with those found by several other techniques based on the same experimental points. The results are compared with: Biogeography-Based Optimization algorithm with Mutation strategies (BBO-M), Levenberg-Marquardt algorithm combined with Simulated Annealing (LMSA), Artificial Bee Colony optimization (ABC) and hybrid Nelder-Mead and Modified Particle Swarm Optimization (NM-MPSO).

Table 2. Compared extracted parameters values RTC France company mono-crystalline silicon solar cell

Item	**FA**	BBOM	LMSA	ABC	NM-MPSO
$I_{ph}(A)$	**0.76069**	0.76078	0.76078	0.7608	0.76078
$I_s(\mu A)$	**0.43244**	0.31874	0.31849	0.3251	0.32306
a	**1.45245**	1.47984	1.47976	1.4817	1.48120
$R_s(\Omega)$	**0.03341**	0.03642	0.03643	0.0364	0.03638
$R_p(\Omega)$	**53.4018**	53.36227	53.32644	53.6433	53.7222

The quality of the results is verified by calculated the statically error and compared.

The values of statically error criteria IAE, RE, MAE, SEE and RMSE are summarized on the Table 3 and compared with recent techniques. The compared error calculated from firefly algorithm are compared and presented on Table 3.

Table 3. Compared of performance indexes for single diode

Item	FA	BBO-M	LMSA	ABC	NM-MPSO
Total IAE	**9.9223e-3**	21.3000e-3	21.5104e-3	20.5000e-03	17.700e-03
RMSE	**5.13816e-4**	9.8634e-04	9.8640e-04	9.86200e-04	9.8602e-04
SSE	**5.72367e-6**	2.52997e-05	2.5297e-05	25.7000e-06	15.6295e-06
MAE	**3.8163e-4**	8.1923e-04	8.2732e-04	7.8846e-004	6.8077e-04

From the Table 3, it is observed that the five parameters identified by firefly algorithm and the calculated current. The provide values of firefly algorithm is the lower values of statistical criteria IAE, RE, MAE, SEE and RMSE for firefly algorithm is highlighted by bold italic size when compared to the other techniques. Therefore, the firefly algorithm achieves the first rank in determination of the lowers IAE, RE, MAE, SEE and RMSE.

In order to illustrate the quality of the five extracted parameters found by firefly algorithm. The five parameters are put in the single diode equation (1) to reconstruct the current-voltage and power-voltage characteristic curves.

The *I-V* and *P-V* characteristics curve resulted from the extracted five parameters by firefly algorithm along with the real points have been illustrated in Figures 3 and Figure 4.

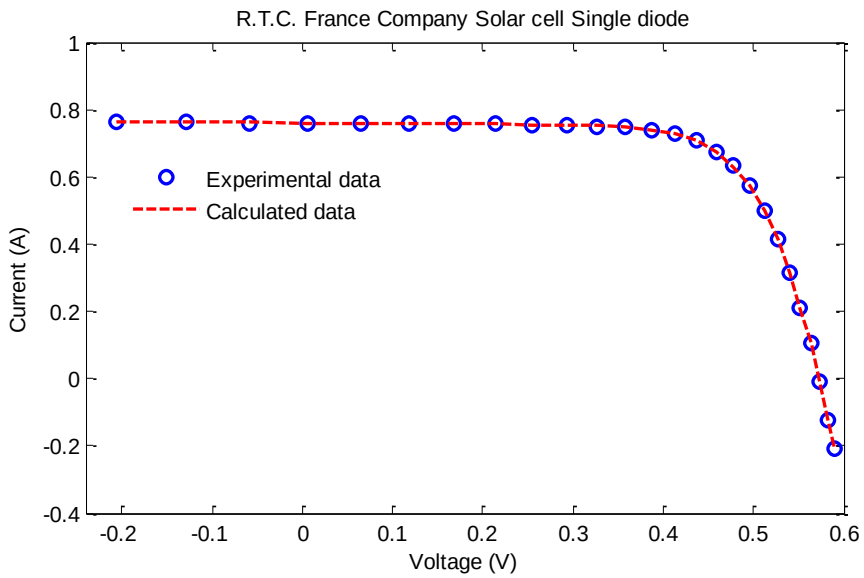

Figure 3. Current-voltage data compared with estimated data

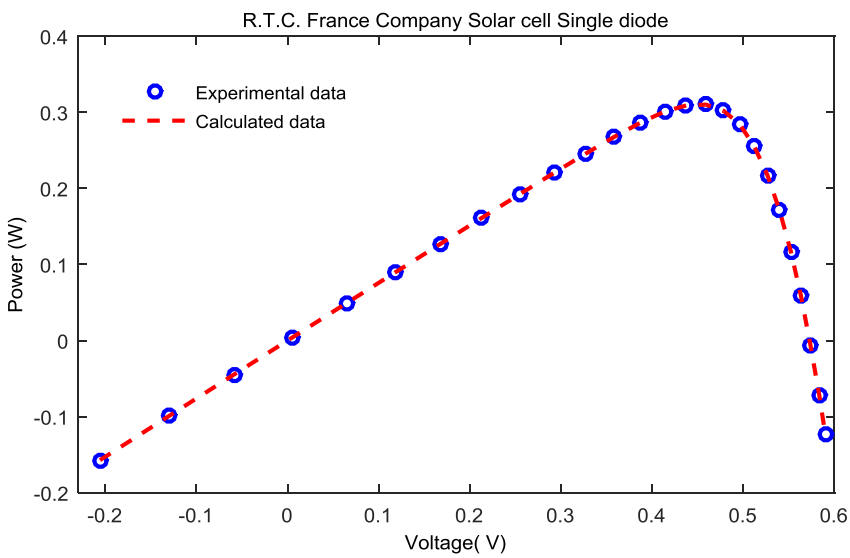

Figure 4. Power-voltage data compared with estimated data

According to the comparison between the extracted curve and experimental curve, we can conclude that the parameters extracted by firefly algorithm is in good agreement with the experimental points.

The figures 5 present the IAE of each measurement using the extracted parameters found by firefly algorithm compared with BBO-M, RDDE, LMSA, CARO and NM-MPSO.

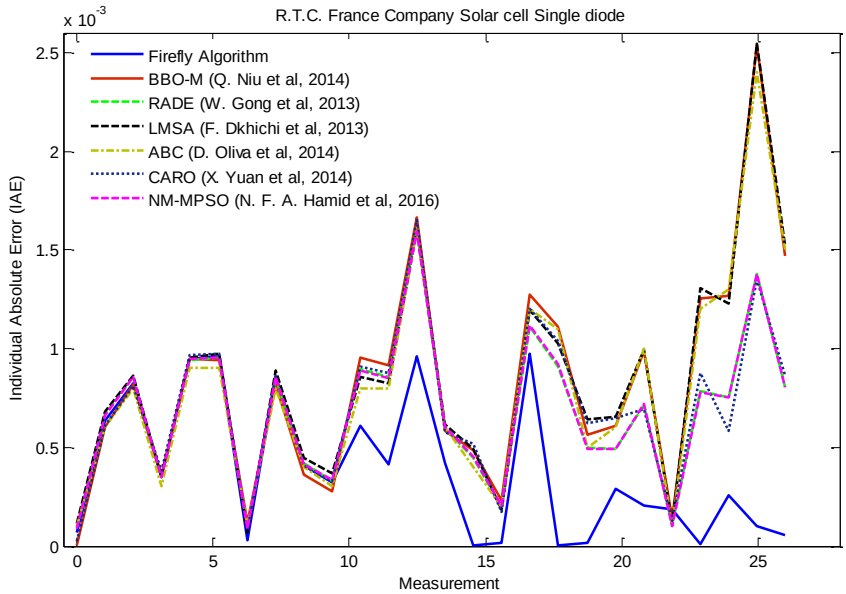

Figure 5. Compared IAE using the extracted parameters by FA and BBO-M, RDDE, LMSA, CARO and NM-MPSO

From figure 5 and table 3, the firefly algorithm has better performance than other algorithms.

The firefly algorithm has a low value on the RE compared as show in the figure 6.

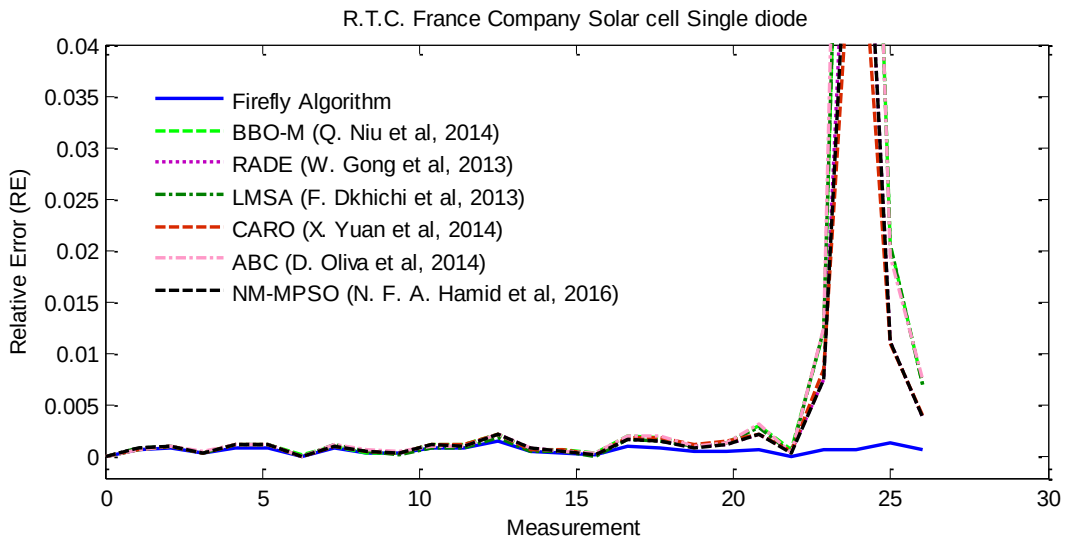

Figure 6. Compared RE using the extracted parameters by FA and BBO-M, RDDE, LMSA, CARO and NM-MPSO

The relative error (RE) for each measurement using optimal values founded by Firefly Algorithm are compared with BBO-M, LMSA, ABC and NM-MPSO.

Conclusion

In this paper, an improved firefly algorithm had been proposed to identify the parameters in the complex nonlinear solar cell model. The five parameters namely the photo current, diode saturation currents, diode quality factor, series resistance and shunt resistance are extracted. In the numerical benchmark experiments, it is shown that improved firefly algorithm can effectively find better solutions than the other techniques.

Statistical analysis revealed that the firefly algorithm can deliver better solutions than BBO-M, LMSA, ABC and NM-MPSO in the five study cases.

Based on the average IAE and RMSE, the CS algorithm showed its fastest convergence speed and robust search performance. The firefly algorithm offers several advantages such as accuracy of solution, simple to be used with objective function and speed of convergence.

The comparison results with other meta-heuristic algorithm shows the accuracy and the advantage of the algorithm. The simulation results also showed that bio-inspected algorithms can improve the existing solar cell by using optimized parameters.

Appendix

The temperature Tc was calculated used following parameters, Eq. (b)

$$T_c = 3.12 + 0.25\left(\frac{G}{G_{ref}}\right) + (0.889T_a) - (1.3W_S) + 273 \qquad \text{(a)}$$

Where: T_a - is the ambient temperature and W_s is the local wind speed (m/s).

The semiconductor band gap energy E_g at temperature T_c is Eq. (b)

$$E_g(T_c) = 1.17 - 4.73\times10^{-4} \times \frac{T_c^2}{T_c + 636} \qquad \text{(b)}$$

The pseudo code of firefly algorithm is:

```
begin
Objective function f(x), x_i = (x_1^i, x_2^i.....x_k^i)
Generate initial population of fireflies xi (i = 1, 2,...,n)
Light intensity Ii at xi
is determined by f(xi)
Define light absorption coefficient
while (t <MaxGeneration)
    for i = 1 : n all n fireflies
        for j = 1 : i all n fireflies
            if (Ij > Ii)
            Move firefly i towards j in d-dimension
            end if
            Attractiveness varies with distance r via exp(-λr)
            Evaluate new solutions and update light intensity
     end for j
    end for i
    Rank the fireflies and find the current best
    end while
    Postprocess results and visualization
end
```

References

1. Bellia H., Youcef R., Fatima M., *A detailed modelling of photovoltaic module using MATLAB*, NRIAG Journal of Astronomy and Geophysics, 2014, 3 (1), p. 53-61.
2. Cuce E., Cuce P.M., Karakas I.H., Bali T., *An accurate model for photovoltaic (PV) modules to determine electrical characteristics and thermodynamic performance parameters*, Energy Conversion and Management, 2017, 146, p. 205-216.
3. Kumar G., Panchal A.K., *A non-iterative technique for determination of solar cell parameters from the light generated I-V characteristic*, Journal of Applied Physics, 2013, 114 (8), p. 084904.
4. Fathabadi H., *Novel neural-analytical method for determining silicon/plastic solar cells and modules characteristics*, Energy Conversion and Management, 2013, 76, p. 253‑ 259.
5. Chan D.S.H., Phang J.C.H., *Analytical methods for the extraction of solar-cell single- and double-diode model parameters from I-V characteristics*, IEEE Transactions on Electron Devices, 1987, 34 (2), p. 286-293.
6. Orioli A., Di Gangi A., *A procedure to calculate the five-parameter model of crystalline silicon photovoltaic modules on the basis of the tabular performance data*, Applied Energy, 2013, 102, p. 1160-1177.
7. Pindado S., Cubas J., *Simple mathematical approach to solar cell/panel behaviour based on datasheet information*, Renewable Energy, 2017, 103, p. 729-738.
8. Oliva, D., Abd El Aziz M., Ella Hassanien A., *Parameter estimation of photovoltaic cells using an improved chaotic whale optimization algorithm*, Applied Energy, 2017, 200, p. 141-154.
9. Gomes R.C.M., Vitorino M.A., Corrêa M.B. de R., Fernandes D.A., Wang R., *Shuffled complex evolution on photovoltaic parameter extraction: A comparative analysis*, IEEE Transactions on Sustainable Energy, 2017, 8 (2), p. 805‑ 815.
10. Niu Q., Zhang L., Li K., *A biogeography-based optimization algorithm with mutation strategies for model parameter estimation of solar and fuel cells*, Energy Conversion and Management, 2014, 86, p. 1173-1185.
11. Dkhichi F., Oukarfi B., Fakkar A., Belbounaguia N., *Parameter identification of solar cell model using Levenberg-Marquardt algorithm combined with simulated annealing*, Solar Energy, 2014, 110, p. 781-788.

12. Hamid N. F. A., Rahim N. A., Selvaraj J., *Solar cell parameters identification using hybrid Nelder-Mead and modified particle swarm optimization*, Journal of Renewable and Sustainable Energy, 2016, 8, p. 015502.
13. Askarzadeh A., Rezazadeh A., *Artificial bee swarm optimization algorithm for parameters identification of solar cell models*, Applied Energy, 2013, 102, p. 943-949.
14. Yang X.-S., *Nature-inspired algorithms and applied optimization*, Cham: Springer International Publishing, 2018, 744.
15. Yang X.-S., *Nature-inspired metaheuristic algorithms*. Luniver Press, 2010.
16. Yang X.S., He X., *Firefly algorithm: recent advances and applications*, International Journal of Swarm Intelligence, 2013, 1 (1), p. 36.
17. Easwaeakhanthan T., Bottin J., Bouchouch I., Boutrit C., *Nonlinear minimization algorithm for determining the solar cell parameters with microcomputers*, International Journal of Solar Energy, 1986, 4 (1), p. 1-12.